This is a preview - click here to buy the full publication

ISO/IEC 14776-151

Edition 1.0 2010-07

INTERNATIONAL STANDARD

colour inside

Information technology – Small computer system interface (SCSI) – Part 151: Serial attached SCSI-1.1 (SAS-1.1)

INTERNATIONAL ELECTROTECHNICAL COMMISSION

PRICE CODE XC

ICS 35.200

ISBN 978-2-88912-092-5

This is a preview - click here to buy the full publication

Contents

Page

Foreword 28

Introduction 29

1 Scope 31

2 Normative references 33

3 Terms, definitions, symbols, abbreviations, keywords and conventions 34
3.1 Terms and definitions 34
3.2 Symbols and abbreviations 54
3.3 Keywords 57
3.4 Editorial conventions 58
3.5 Class diagram and object diagram conventions 59
3.6 State machine conventions 64
3.6.1 State machine conventions overview 64
3.6.2 Transitions 64
3.6.3 Messages, requests, indications, confirmations, responses and event notifications 65
3.6.4 State machine counters, timers and variables 65
3.6.5 State machine arguments 65
3.7 Bit and byte ordering 65
3.8 Notation for procedures and functions 66

4 General 67
4.1 Architecture 67
4.1.1 Architecture overview 67
4.1.2 Physical links and phys 68
4.1.3 Ports (narrow ports and wide ports) 71
4.1.4 SAS devices 74
4.1.5 Expander devices (edge expander devices and fanout expander devices) 75
4.1.6 Service delivery subsystem 77
4.1.7 Domains 78
4.1.8 Expander device topologies 80
4.1.8.1 Expander device topology overview 80
4.1.8.2 Edge expander device set 80
4.1.8.3 Expander device topologies 81
4.1.9 Pathways 84
4.1.10 Connections 85
4.2 Names and identifiers 87
4.2.1 Names and identifiers overview 87
4.2.2 SAS address 87
4.2.3 Hashed SAS address 88
4.2.4 Device names 88
4.2.5 Port names 88
4.2.6 Port identifiers 88
4.2.7 Phy identifiers 89
4.3 State machines 90
4.3.1 State machine overview 90
4.3.2 Transmit data path 92
4.3.3 Receive data path 96
4.3.4 State machines and SAS device, SAS port and SAS phy classes 99
4.4 Resets 100
4.4.1 Reset overview 100
4.4.2 Hard reset 102
4.4.2.1 Hard reset overview 102
4.4.2.2 Additional hard reset processing by SAS ports 102
4.4.2.3 Additional hard reset processing by expander ports 102

This is a preview - click here to buy the full publication

4.5 I_T nexus loss 102
4.6 Expander device model 102
4.6.1 Expander device model overview 102
4.6.2 Expander ports 103
4.6.3 Expander connection manager (ECM) 104
4.6.4 Expander connection router (ECR) 104
4.6.5 Broadcast primitive processor (BPP) 104
4.6.6 Expander device interfaces 104
4.6.6.1 Expander device interface overview 104
4.6.6.2 Expander device interfaces detail 106
4.6.6.3 ECM interface 106
4.6.6.4 ECR interface 108
4.6.6.5 BPP interface 110
4.6.7 Expander device routing 110
4.6.7.1 Routing attributes and routing methods 110
4.6.7.2 Connection request routing 111
4.6.7.3 Expander route table 111
4.7 Discover process 112
4.7.1 Discover process overview 112
4.7.2 Allowed topologies 114
4.7.3 Discover process optimization 115
4.7.4 Expander route index order 116
4.8 Phy test functions 121

5 Physical layer 122
5.1 Physical layer overview 122
5.2 Passive interconnect 122
5.2.1 SATA connectors and cable assemblies 122
5.2.2 SAS connectors and cables 122
5.2.3 Connectors 126
5.2.3.1 Connectors overview 126
5.2.3.2 SAS internal connectors 127
5.2.3.2.1 SAS Drive connectors 127
5.2.3.2.1.1 SAS Drive plug connector 127
5.2.3.2.1.2 SAS Drive cable receptacle connector 127
5.2.3.2.1.3 SAS Drive backplane receptacle connector 128
5.2.3.2.1.4 SAS Drive connector pin assignments 128
5.2.3.2.2 SAS 4i connectors 130
5.2.3.2.2.1 SAS 4i cable receptacle connector 130
5.2.3.2.2.2 SAS 4i plug connector 130
5.2.3.2.2.3 SAS 4i connector pin assignments 131
5.2.3.2.3 Mini SAS 4i connectors 132
5.2.3.2.3.1 Mini SAS 4i cable plug connector 132
5.2.3.2.3.2 Mini SAS 4i receptacle connector 133
5.2.3.2.3.3 Mini SAS 4i connector pin assignments 134
5.2.3.3 SAS external connectors 136
5.2.3.3.1 SAS 4x connectors 136
5.2.3.3.1.1 SAS 4x cable plug connector 136
5.2.3.3.1.2 SAS 4x receptacle connector 136
5.2.3.3.1.3 SAS 4x connector pin assignments 138
5.2.3.3.2 Mini SAS 4x connectors 138
5.2.3.3.2.1 Mini SAS 4x cable plug connector 138
5.2.3.3.2.2 Mini SAS 4x receptacle connector 140
5.2.3.3.2.3 Mini SAS 4x connector pin assignments 143
5.2.4 Cable assemblies 143
5.2.4.1 SAS internal cable assemblies 143
5.2.4.1.1 SAS Drive cable assemblies 143
5.2.4.1.2 SAS internal symmetric cable assemblies 144
5.2.4.1.2.1 SAS internal symmetric cable assemblies overview 144
5.2.4.1.2.2 SAS internal symmetric cable assembly - SAS 4i 145

This is a preview - click here to buy the full publication

5.2.4.1.2.3 SAS internal symmetric cable assembly - Mini SAS 4i 146
5.2.4.1.2.4 SAS internal symmetric cable assembly - SAS 4i to Mini SAS 4i 147
5.2.4.1.3 SAS internal fanout cable assemblies 148
5.2.4.1.3.1 SAS internal fanout cable assemblies overview 148
5.2.4.1.3.2 SAS internal controller-based fanout cable assemblies 149
5.2.4.1.3.3 SAS internal backplane-based fanout cable assemblies 151
5.2.4.2 SAS external cable assemblies 152
5.2.4.2.1 SAS external cable assemblies overview 152
5.2.4.2.2 SAS external cable assembly - SAS 4x 153
5.2.4.2.3 SAS external cable assembly - Mini SAS 4x 154
5.2.4.2.4 SAS external cable assembly - SAS 4x to Mini SAS 4x 156
5.2.5 Backplanes 156
5.2.6 Cable assembly and backplane specifications 157
5.3 Transmitter and receiver device electrical characteristics 161
5.3.1 Compliance points 161
5.3.2 Test loads 169
5.3.2.1 Test loads overview 169
5.3.2.2 Zero-length test load 170
5.3.2.3 TCTF test load 171
5.3.2.4 Low-loss TCTF test load 173
5.3.3 General electrical characteristics 174
5.3.4 Transmitter and receiver device transients 177
5.3.5 Eye masks 177
5.3.5.1 Eye masks overview 177
5.3.5.2 Transmitter device eye mask 178
5.3.5.3 Receiver device eye mask 178
5.3.5.4 Receiver device jitter tolerance eye mask 179
5.3.6 Transmitter device characteristics 180
5.3.6.1 Transmitter device characteristics overview 180
5.3.6.2 Transmitter device signal output characteristics as measured with the zero-length test load 181
5.3.6.3 Transmitter device signal output characteristics as measured with each test load 181
5.3.6.4 Transmitter device maximum jitter 183
5.3.6.5 Transmitter device signal output levels for OOB signals 183
5.3.7 Receiver device characteristics 183
5.3.7.1 Receiver device characteristics overview 183
5.3.7.2 Delivered signal (receiver device signal tolerance) characteristics 184
5.3.7.3 Maximum delivered jitter 186
5.3.7.4 Receiver device jitter tolerance 186
5.3.8 Spread spectrum clocking 187
5.3.9 Non-tracking clock architecture 187
5.4 READY LED signal electrical characteristics 187

6 Phy layer 189
6.1 Phy layer overview 189
6.2 8b10b coding 189
6.2.1 8b10b coding overview 189
6.2.2 8b10b coding introduction 189
6.2.3 8b10b coding notation conventions 189
6.3 Character encoding and decoding 190
6.3.1 Introduction 190
6.3.2 Transmission order 190
6.3.3 Data and control characters 190
6.3.4 Encoding characters in the transmitter 197
6.3.5 Decoding characters in the receiver 197
6.4 Dwords, primitives, data dwords and invalid dwords 197
6.5 Bit order 198
6.6 Out of band (OOB) signals 199
6.6.1 OOB signals overview 199
6.6.2 Transmitting OOB signals 200
6.6.3 Receiving OOB signals 202

This is a preview - click here to buy the full publication

6.6.4 Transmitting the SATA port selection signal 204
6.7 Phy reset sequences 204
6.7.1 Phy reset sequences overview 204
6.7.2 SATA phy reset sequence 205
6.7.2.1 SATA OOB sequence 205
6.7.2.2 SATA speed negotiation sequence 205
6.7.3 SAS to SATA phy reset sequence 206
6.7.4 SAS to SAS phy reset sequence 207
6.7.4.1 SAS OOB sequence 207
6.7.4.2 SAS speed negotiation sequence 208
6.7.4.2.1 SAS speed negotiation sequence overview 208
6.7.4.2.2 Speed negotiation window 209
6.7.4.2.3 SAS speed negotiation sequence 210
6.7.5 Phy reset sequence after devices are attached 212
6.8 SP (phy layer) state machine 213
6.8.1 SP state machine overview 213
6.8.2 SP transmitter and receiver 215
6.8.3 OOB sequence states 216
6.8.3.1 OOB sequence states overview 216
6.8.3.2 SP0:OOB_COMINIT state 216
6.8.3.2.1 State description 216
6.8.3.2.2 Transition SP0:OOB_COMINIT to SP1:OOB_AwaitCOMX 217
6.8.3.2.3 Transition SP0:OOB_COMINIT to SP3:OOB_AwaitCOMINIT_Sent 217
6.8.3.2.4 Transition SP0:OOB_COMINIT to SP4:OOB_COMSAS 217
6.8.3.3 SP1:OOB_AwaitCOMX state 217
6.8.3.3.1 State description 217
6.8.3.3.2 Transition SP1:OOB_AwaitCOMX to SP0:OOB_COMINIT 217
6.8.3.3.3 Transition SP1:OOB_AwaitCOMX to SP4:OOB_COMSAS 217
6.8.3.4 SP2:OOB_NoCOMSASTimeout state 218
6.8.3.4.1 State description 218
6.8.3.4.2 Transition SP2:OOB_NoCOMSASTimeout to SP0:OOB_COMINIT 218
6.8.3.4.3 Transition SP2:OOB_NoCOMSASTimeout to SP4:OOB_COMSAS 218
6.8.3.5 SP3:OOB_AwaitCOMINIT_Sent state 218
6.8.3.5.1 State description 218
6.8.3.5.2 Transition SP3:OOB_AwaitCOMINIT_Sent to SP4:OOB_COMSAS 218
6.8.3.6 SP4:OOB_COMSAS state 218
6.8.3.6.1 State description 218
6.8.3.6.2 Transition SP4:OOB_COMSAS to SP5:OOB_AwaitCOMSAS_Sent 218
6.8.3.6.3 Transition SP4:OOB_COMSAS to SP6:OOB_AwaitNoCOMSAS 218
6.8.3.6.4 Transition SP4:OOB_COMSAS to SP7:OOB_AwaitCOMSAS 219
6.8.3.7 SP5:OOB_AwaitCOMSAS_Sent state 219
6.8.3.7.1 State description 219
6.8.3.7.2 Transition SP5:OOB_AwaitCOMSAS_Sent to SP6:OOB_AwaitNoCOMSAS 219
6.8.3.8 SP6:OOB_AwaitNoCOMSAS state 219
6.8.3.8.1 State description 219
6.8.3.8.2 Transition SP6:OOB_AwaitNoCOMSAS to SP0:OOB_COMINIT 219
6.8.3.8.3 Transition SP6:OOB_AwaitNoCOMSAS to SP8:SAS_Start 219
6.8.3.9 SP7:OOB_AwaitCOMSAS state 219
6.8.3.9.1 State description 219
6.8.3.9.2 Transition SP7:OOB_AwaitCOMSAS to SP2:OOB_NoCOMSASTimeout 219
6.8.3.9.3 Transition SP7:OOB_AwaitCOMSAS to SP6:OOB_AwaitNoCOMSAS 219
6.8.3.9.4 Transition SP7:OOB_AwaitCOMSAS to SP16:SATA_COMWAKE 219
6.8.3.9.5 Transition SP7:OOB_AwaitCOMSAS to SP26:SATA _SpinupHold 220
6.8.4 SAS speed negotiation states 220
6.8.4.1 SAS speed negotiation states overview 220
6.8.4.2 SP8:SAS_Start state 221
6.8.4.2.1 State description 221
6.8.4.2.2 Transition SP8:SAS_Start to SP0:OOB_COMINIT 222
6.8.4.2.3 Transition SP8:SAS_Start to SP9:SAS_RateNotSupported 222
6.8.4.2.4 Transition SP8:SAS_Start to SP10:SAS_AwaitALIGN 222

This is a preview - click here to buy the full publication

6.8.4.3 SP9:SAS_RateNotSupported state 222
6.8.4.3.1 State description 222
6.8.4.3.2 Transition SP9:SAS_RateNotSupported to SP14:SAS_Fail 222
6.8.4.4 SP10:SAS_AwaitALIGN state 222
6.8.4.4.1 State description 222
6.8.4.4.2 Transition SP10:SAS_AwaitALIGN to SP0:OOB_COMINIT 222
6.8.4.4.3 Transition SP10:SAS_AwaitALIGN to SP11:SAS_AwaitALIGN1 222
6.8.4.4.4 Transition SP10:SAS_AwaitALIGN to SP12:SAS_AwaitSNW 222
6.8.4.4.5 Transition SP10:SAS_AwaitALIGN to SP14:SAS_Fail 222
6.8.4.5 SP11:SAS_AwaitALIGN1 state 223
6.8.4.5.1 State description 223
6.8.4.5.2 Transition SP11:SAS_AwaitALIGN1 to SP0:OOB_COMINIT 223
6.8.4.5.3 Transition SP11:SAS_AwaitALIGN1 to SP12:SAS_AwaitSNW 223
6.8.4.5.4 Transition SP11:SAS_AwaitALIGN1 to SP14:SAS_Fail 223
6.8.4.6 SP12:SAS_AwaitSNW state 223
6.8.4.6.1 State description 223
6.8.4.6.2 Transition SP12:SAS_AwaitSNW to SP0:OOB_COMINIT 223
6.8.4.6.3 Transition SP12:SAS_AwaitSNW to SP13:SAS_Pass 223
6.8.4.7 SP13:SAS_Pass state 223
6.8.4.7.1 State description 223
6.8.4.7.2 Transition SP13:SAS_Pass to SP0:OOB_COMINIT 223
6.8.4.7.3 Transition SP13:SAS_Pass to SP8:SAS_Start 223
6.8.4.7.4 Transition SP13:SAS_Pass to SP15:SAS_PHY_Ready 224
6.8.4.8 SP14:SAS_Fail state 224
6.8.4.8.1 State description 224
6.8.4.8.2 Transition SP14:SAS_Fail to SP1:OOB_AwaitCOMX 224
6.8.4.8.3 Transition SP14:SAS_Fail to SP8:SAS_Start 224
6.8.4.9 SP15:SAS_PHY_Ready state 224
6.8.4.9.1 State description 224
6.8.4.9.2 Transition SP15:SAS_PHY_Ready to SP0:OOB_COMINIT 224
6.8.5 SATA host emulation states 225
6.8.5.1 SATA host emulation states overview 225
6.8.5.2 SP16:SATA_COMWAKE state 226
6.8.5.2.1 State description 226
6.8.5.2.2 Transition SP16:SATA_COMWAKE to SP17:SATA_AwaitCOMWAKE 227
6.8.5.3 SP17:SATA_AwaitCOMWAKE state 227
6.8.5.3.1 State description 227
6.8.5.3.2 Transition SP17:SATA_AwaitCOMWAKE to SP0:OOB_COMINIT 227
6.8.5.3.3 Transition SP17:SATA_AwaitCOMWAKE to SP18:SATA_AwaitNoCOMWAKE 227
6.8.5.4 SP18:SATA_AwaitNoCOMWAKE state 227
6.8.5.4.1 State description 227
6.8.5.4.2 Transition SP18:SATA_AwaitNoCOMWAKE to SP0:OOB_COMINIT 227
6.8.5.4.3 Transition SP18:SATA_AwaitNoCOMWAKE to SP19:SATA_AwaitALIGN 227
6.8.5.5 SP19:SATA_AwaitALIGN state 227
6.8.5.5.1 State description 227
6.8.5.5.2 Transition SP19:SATA_AwaitALIGN to SP0:OOB_COMINIT 227
6.8.5.5.3 Transition SP19:SATA_AwaitALIGN to SP20:SATA_AdjustSpeed 227
6.8.5.6 SP20:SATA_AdjustSpeed state 227
6.8.5.6.1 State description 227
6.8.5.6.2 Transition SP20:SATA_AdjustSpeed to SP0:OOB_COMINIT 228
6.8.5.6.3 Transition SP20:SATA_AdjustSpeed to SP21:SATA_TransmitALIGN 228
6.8.5.7 SP21:SATA_TransmitALIGN state 228
6.8.5.7.1 State description 228
6.8.5.7.2 Transition SP21:SATA_TransmitALIGN to SP0:OOB_COMINIT 228
6.8.5.7.3 Transition SP21:SATA_TransmitALIGN to SP22:SATA_PHY_Ready 228
6.8.5.8 SP22:SATA_PHY_Ready state 228
6.8.5.8.1 State description 228
6.8.5.8.2 Transition SP22:SATA_PHY_Ready to SP0:OOB_COMINIT 228
6.8.5.8.3 Transition SP22:SATA_PHY_Ready to SP23:SATA_PM_Partial 228
6.8.5.8.4 Transition SP22:SATA_PHY_Ready to SP24:SATA_PM_Slumber 228

This is a preview - click here to buy the full publication

6.8.5.9 SP23:SATA_PM_Partial state 228
6.8.5.9.1 State description 228
6.8.5.9.2 Transition SP23:SATA_PM_Partial to SP0:OOB_COMINIT 229
6.8.5.9.3 Transition SP23:SATA_PM_Partial to SP16:SATA_COMWAKE 229
6.8.5.9.4 Transition SP23:SATA_PM_Partial to SP18:SATA_AwaitNoCOMWAKE 229
6.8.5.10 SP24:SATA_PM_Slumber state 229
6.8.5.10.1 State description 229
6.8.5.10.2 Transition SP24:SATA_PM_Slumber to SP0:OOB_COMINIT 229
6.8.5.10.3 Transition SP24:SATA_PM_Slumber to SP16:SATA_COMWAKE 229
6.8.5.10.4 Transition SP24:SATA_PM_Slumber to SP18:SATA_AwaitNoCOMWAKE 229
6.8.6 SATA port selector state 229
6.8.6.1 State description 229
6.8.6.2 Transition SP25:SATA_PortSel to SP1:OOB_AwaitCOMX 229
6.8.7 SATA spinup hold state 230
6.8.7.1 State description 230
6.8.7.2 Transition SP26:SATA_SpinupHold to SP0:OOB_COMINIT 230
6.9 SP_DWS (phy layer dword synchronization) state machine 230
6.9.1 SP_DWS state machine overview 230
6.9.2 SP_DWS receiver 232
6.9.3 SP_DWS0:AcquireSync state 233
6.9.3.1 State description 233
6.9.3.2 Transition SP_DWS0:AcquireSync to SP_DWS1:Valid1 233
6.9.4 SP_DWS1:Valid1 state 233
6.9.4.1 State description 233
6.9.4.2 Transition SP_DWS1:Valid1 to SP_DWS0:AcquireSync 233
6.9.4.3 Transition SP_DWS1:Valid1 to SP_DWS2:Valid2 233
6.9.5 SP_DWS2:Valid2 state 233
6.9.5.1 State description 233
6.9.5.2 Transition SP_DWS2:Valid2 to SP_DWS0:AcquireSync 234
6.9.5.3 Transition SP_DWS2:Valid2 to SP_DWS3:SyncAcquired 234
6.9.6 SP_DWS3:SyncAcquired state 234
6.9.6.1 State description 234
6.9.6.2 Transition SP_DWS3:SyncAcquired to SP_DWS4:Lost1 234
6.9.7 SP_DWS4:Lost1 state 234
6.9.7.1 State description 234
6.9.7.2 Transition SP_DWS4:Lost1 to SP_DWS5:Lost1Recovered 234
6.9.7.3 Transition SP_DWS4:Lost1 to SP_DWS6:Lost2 234
6.9.8 SP_DWS5:Lost1Recovered state 234
6.9.8.1 State description 234
6.9.8.2 Transition SP_DWS5:Lost1Recovered to SP_DWS3:SyncAcquired 234
6.9.8.3 Transition SP_DWS5:Lost1Recovered to SP_DWS6:Lost2 234
6.9.9 SP_DWS6:Lost2 state 234
6.9.9.1 State description 234
6.9.9.2 Transition SP_DWS6:Lost2 to SP_DWS7:Lost2Recovered 234
6.9.9.3 Transition SP_DWS6:Lost2 to SP_DWS8:Lost3 235
6.9.10 SP_DWS7:Lost2Recovered state 235
6.9.10.1 State description 235
6.9.10.2 Transition SP_DWS7:Lost2Recovered to SP_DWS4:Lost1 235
6.9.10.3 Transition SP_DWS7:Lost2Recovered to SP_DWS8:Lost3 235
6.9.11 SP_DWS8:Lost3 state 235
6.9.11.1 State description 235
6.9.11.2 Transition SP_DWS8:Lost3 to SP_DWS9:Lost3Recovered 235
6.9.11.3 Transition SP_DWS8:Lost3 to SP_DWS0:AcquireSync 235
6.9.12 SP_DWS9:Lost3Recovered state 235
6.9.12.1 State description 235
6.9.12.2 Transition SP_DWS9:Lost3Recovered to SP_DWS6:Lost2 235
6.9.12.3 Transition SP_DWS9:Lost3Recovered to SP_DWS0:AcquireSync 235
6.10 Spin-up 235

7 Link layer 237

This is a preview - click here to buy the full publication

7.1 Link layer overview 237
7.2 Primitives 237
7.2.1 Primitives overview 237
7.2.2 Primitive summary 237
7.2.3 Primitive encodings 241
7.2.4 Primitive sequences 245
7.2.4.1 Primitive sequences overview 245
7.2.4.2 Single primitive sequence 245
7.2.4.3 Repeated primitive sequence 245
7.2.4.4 Continued primitive sequence 246
7.2.4.5 Triple primitive sequence 246
7.2.4.6 Redundant primitive sequence 247
7.2.5 Primitives not specific to type of connections 248
7.2.5.1 AIP (Arbitration in progress) 248
7.2.5.2 ALIGN 249
7.2.5.3 BREAK 250
7.2.5.4 BROADCAST 250
7.2.5.5 CLOSE 251
7.2.5.6 EOAF (End of address frame) 251
7.2.5.7 ERROR 251
7.2.5.8 HARD_RESET 251
7.2.5.9 NOTIFY 251
7.2.5.10 OPEN_ACCEPT 252
7.2.5.11 OPEN_REJECT 252
7.2.5.12 SOAF (Start of address frame) 254
7.2.6 Primitives used only inside SSP and SMP connections 255
7.2.6.1 ACK (Acknowledge) 255
7.2.6.2 CREDIT_BLOCKED 255
7.2.6.3 DONE 255
7.2.6.4 EOF (End of frame) 255
7.2.6.5 NAK (Negative acknowledgement) 255
7.2.6.6 RRDY (Receiver ready) 256
7.2.6.7 SOF (Start of frame) 256
7.2.7 Primitives used only inside STP connections and on SATA physical links 256
7.2.7.1 SATA_ERROR 256
7.2.7.2 SATA_PMACK, SATA_PMNAK, SATA_PMREQ_P and SATA_PMREQ_S (Power management acknowledgements and requests) 256
7.2.7.3 SATA_HOLD and SATA_HOLDA (Hold and hold acknowledge) 257
7.2.7.4 SATA_R_RDY and SATA_X_RDY (Receiver ready and transmitter ready) 257
7.2.7.5 Other primitives used inside STP connections and on SATA physical links 257
7.3 Clock skew management 257
7.4 Idle physical links 258
7.5 CRC 258
7.5.1 CRC overview 258
7.5.2 CRC generation 259
7.5.3 CRC checking 261
7.6 Scrambling 261
7.7 Bit order of CRC and scrambler 263
7.8 Address frames 266
7.8.1 Address frames overview 266
7.8.2 IDENTIFY address frame 268
7.8.3 OPEN address frame 270
7.9 Identification and hard reset sequence 272
7.9.1 Identification and hard reset sequence overview 272
7.9.2 SAS initiator device rules 272
7.9.3 Fanout expander device rules 273
7.9.4 Edge expander device rules 273
7.9.5 SL_IR (link layer identification and hard reset) state machines 273
7.9.5.1 SL_IR state machines overview 273
7.9.5.2 SL_IR transmitter and receiver 274

This is a preview - click here to buy the full publication

7.9.5.3 SL_IR_TIR (transmit IDENTIFY or HARD_RESET) state machine 275
7.9.5.3.1 SL_IR_TIR state machine overview 275
7.9.5.3.2 SL_IR_TIR1:Idle state 275
7.9.5.3.2.1 State description 275
7.9.5.3.2.2 Transition SL_IR_TIR1:Idle to SL_IR_TIR2:Transmit_Identify 275
7.9.5.3.2.3 Transition SL_IR_TIR1:Idle to SL_IR_TIR3:Transmit_Hard_Reset.... 275
7.9.5.3.3 SL_IR_TIR2:Transmit_Identify state....275
7.9.5.3.3.1 State description 275
7.9.5.3.3.2 Transition SL_IR_TIR2:Transmit_Identify to SL_IR_TIR4:Completed.... 275
7.9.5.3.4 SL_IR_TIR3:Transmit_Hard_Reset state 276
7.9.5.3.4.1 State description 276
7.9.5.3.4.2 Transition SL_IR_TIR3:Transmit_Hard_Reset to SL_IR_TIR4:Completed 276
7.9.5.3.5 SL_IR_TIR4:Completed state....276
7.9.5.4 SL_IR_RIF (receive IDENTIFY address frame) state machine....276
7.9.5.4.1 SL_IR_RIF state machine overview 276
7.9.5.4.2 SL_IR_RIF1:Idle state 276
7.9.5.4.2.1 State description 276
7.9.5.4.2.2 Transition SL_IR_RIF1:Idle to SL_IR_RIF2:Receive_Identify_Frame 276
7.9.5.4.3 SL_IR_RIF2:Receive_Identify_Frame state 276
7.9.5.4.3.1 State description 276
7.9.5.4.3.2 Transition SL_IR_RIF2:Receive_Identify_Frame to SL_IR_RIF3:Completed 277
7.9.5.4.4 SL_IR_RIF3:Completed state....277
7.9.5.5 SL_IR_IRC (identification and hard reset control) state machine 277
7.9.5.5.1 SL_IR_IRC state machine overview....277
7.9.5.5.2 SL_IR_IRC1:Idle state....277
7.9.5.5.2.1 State description 277
7.9.5.5.2.2 Transition SL_IR_IRC1:Idle to SL_IR_IRC2:Wait.... 277
7.9.5.5.3 SL_IR_IRC2:Wait state....277
7.9.5.5.3.1 State description 277
7.9.5.5.3.2 Transition SL_IR_IRC2:Wait to SL_IR_IRC3:Completed 278
7.9.5.5.4 SL_IR_IRC3:Completed state 278
7.10 Power management 278
7.11 SAS domain changes....278
7.12 Connections 279
7.12.1 Connections overview....279
7.12.2 Opening a connection....280
7.12.2.1 Connection request 280
7.12.2.2 Results of a connection request....280
7.12.3 Arbitration fairness....281
7.12.4 Arbitration and resource management in an expander device 282
7.12.4.1 Arbitration and resource management in an expander device overview....282
7.12.4.2 Arbitration status 283
7.12.4.3 Edge expander devices....283
7.12.4.4 Fanout expander devices....284
7.12.4.5 Partial Pathway Timeout timer 284
7.12.4.6 Pathway recovery....284
7.12.5 Aborting a connection request 285
7.12.6 Closing a connection 287
7.12.7 Breaking a connection 288
7.13 Rate matching 288
7.14 SL (link layer for SAS phys) state machines 291
7.14.1 SL state machines overview 291
7.14.2 SL transmitter and receiver....293
7.14.3 SL_RA (receive OPEN address frame) state machine....294
7.14.4 SL_CC (connection control) state machine 295
7.14.4.1 SL_CC state machine overview....295
7.14.4.2 SL_CC0:Idle state 296
7.14.4.2.1 State description....296
7.14.4.2.2 Transition SL_CC0:Idle to SL_CC1:ArbSel 296
7.14.4.2.3 Transition SL_CC0:Idle to SL_CC2:Selected....296

This is a preview - click here to buy the full publication

7.14.4.3 SL_CC1:ArbSel state 296
7.14.4.3.1 State description 296
7.14.4.3.2 Transition SL_CC1:ArbSel to SL_CC0:Idle 297
7.14.4.3.3 Transition SL_CC1:ArbSel to SL_CC2:Selected 297
7.14.4.3.4 Transition SL_CC1:ArbSel to SL_CC3:Connected 297
7.14.4.3.5 Transition SL_CC1:ArbSel to SL_CC5:BreakWait 298
7.14.4.3.6 Transition SL_CC1:ArbSel to SL_CC6:Break 298
7.14.4.4 SL_CC2:Selected state 298
7.14.4.4.1 State description 298
7.14.4.4.2 Transition SL_CC2:Selected to SL_CC0:Idle 298
7.14.4.4.3 Transition SL_CC2:Selected to SL_CC3:Connected 299
7.14.4.4.4 Transition SL_CC2:Selected to SL_CC6:Break 299
7.14.4.5 SL_CC3:Connected state 299
7.14.4.5.1 State description 299
7.14.4.5.2 Transition SL_CC3:Connected to SL_CC4:DisconnectWait 299
7.14.4.5.3 Transition SL_CC3:Connected to SL_CC5:BreakWait 299
7.14.4.5.4 Transition SL_CC3:Connected to SL_CC6:Break 299
7.14.4.5.5 Transition SL_CC3:Connected to SL_CC7:CloseSTP 299
7.14.4.6 SL_CC4:DisconnectWait state 299
7.14.4.6.1 State description 299
7.14.4.6.2 Transition SL_CC4:DisconnectWait to SL_CC0:Idle 300
7.14.4.6.3 Transition SL_CC4:DisconnectWait to SL_CC5:BreakWait 300
7.14.4.6.4 Transition SL_CC4:DisconnectWait to SL_CC6:Break 300
7.14.4.7 SL_CC5:BreakWait state 300
7.14.4.7.1 State description 300
7.14.4.7.2 Transition SL_CC5:BreakWait to SL_CC0:Idle 300
7.14.4.8 SL_CC6:Break state 300
7.14.4.8.1 State description 300
7.14.4.8.2 Transition SL_CC6:Break to SL_CC0:Idle 300
7.14.4.9 SL_CC7:CloseSTP state 300
7.14.4.9.1 State description 300
7.14.4.9.2 Transition SL_CC7:CloseSTP to SL_CC0:Idle 301
7.15 XL (link layer for expander phys) state machine 301
7.15.1 XL state machine overview 301
7.15.2 XL transmitter and receiver 304
7.15.3 XL0:Idle state 306
7.15.3.1 State description 306
7.15.3.2 Transition XL0:Idle to XL1:Request_Path 306
7.15.3.3 Transition XL0:Idle to XL5:Forward_Open 306
7.15.4 XL1:Request_Path state 306
7.15.4.1 State description 306
7.15.4.2 Transition XL1:Request_Path to XL0:Idle 307
7.15.4.3 Transition XL1:Request_Path to XL2:Request_Open 307
7.15.4.4 Transition XL1:Request_Path to XL4:Open_Reject 307
7.15.4.5 Transition XL1:Request_Path to XL5:Forward_Open 308
7.15.4.6 Transition XL1:Request_Path to XL9:Break 308
7.15.5 XL2:Request_Open state 308
7.15.5.1 State description 308
7.15.5.2 Transition XL2:Request_Open to XL3:Open_Confirm_Wait 308
7.15.6 XL3:Open_Confirm_Wait state 308
7.15.6.1 State description 308
7.15.6.2 Transition XL3:Open_Confirm_Wait to XL0:Idle 309
7.15.6.3 Transition XL3:Open_Confirm_Wait to XL1:Request_Path 309
7.15.6.4 Transition XL3:Open_Confirm_Wait to XL5:Forward_Open 309
7.15.6.5 Transition XL3:Open_Confirm_Wait to XL7:Connected 309
7.15.6.6 Transition XL3:Open_Confirm_Wait to XL9:Break 309
7.15.6.7 Transition XL3:Open_Confirm_Wait to XL10:Break_Wait 309
7.15.7 XL4:Open_Reject state 309
7.15.7.1 State description 309
7.15.7.2 Transition XL4:Open_Reject to XL0:Idle 310

This is a preview - click here to buy the full publication

7.15.8 XL5:Forward_Open state....310
7.15.8.1 State description....310
7.15.8.2 Transition XL5:Forward_Open to XL6:Open_Response_Wait....310
7.15.9 XL6:Open_Response_Wait state....310
7.15.9.1 State description....310
7.15.9.2 Transition XL6:Open_Response_Wait to XL0:Idle....311
7.15.9.3 Transition XL6:Open_Response_Wait to XL1:Request_Path....311
7.15.9.4 Transition XL6:Open_Response_Wait to XL2:Request_Open....311
7.15.9.5 Transition XL6:Open_Response_Wait to XL7:Connected....311
7.15.9.6 Transition XL6:Open_Response_Wait to XL9:Break....312
7.15.9.7 Transition XL6:Open_Response_Wait to XL10:Break_Wait....312
7.15.10 XL7:Connected state....312
7.15.10.1 State description....312
7.15.10.2 Transition XL7:Connected to XL8:Close_Wait....312
7.15.10.3 Transition XL7:Connected to XL9:Break....312
7.15.10.4 Transition XL7:Connected to XL10:Break_Wait....312
7.15.11 XL8:Close_Wait state....313
7.15.11.1 State description....313
7.15.11.2 Transition XL8:Close_Wait to XL0:Idle....313
7.15.11.3 Transition XL8:Close_Wait to XL9:Break....313
7.15.11.4 Transition XL8:Close_Wait to XL10:Break_Wait....313
7.15.12 XL9:Break state....313
7.15.12.1 State description....313
7.15.12.2 Transition XL9:Break to XL0:Idle....313
7.15.13 XL10:Break_Wait state....314
7.15.13.1 State description....314
7.15.13.2 Transition XL10:Break_Wait to XL0:Idle....314
7.16 SSP link layer....314
7.16.1 Opening an SSP connection....314
7.16.2 Full duplex....314
7.16.3 SSP frame transmission and reception....314
7.16.4 SSP flow control....315
7.16.5 Interlocked frames....315
7.16.6 Breaking an SSP connection....317
7.16.7 Closing an SSP connection....317
7.16.8 SSP (link layer for SSP phys) state machines....318
7.16.8.1 SSP state machines overview....318
7.16.8.2 SSP transmitter and receiver....321
7.16.8.3 SSP_TIM (transmit interlocked frame monitor) state machine....322
7.16.8.4 SSP_TCM (transmit frame credit monitor) state machine....323
7.16.8.5 SSP_D (DONE control) state machine....323
7.16.8.6 SSP_TF (transmit frame control) state machine....324
7.16.8.6.1 SSP_TF state machine overview....324
7.16.8.6.2 SSP_TF1:Connected_Idle state....324
7.16.8.6.2.1 State description....324
7.16.8.6.2.2 Transition SSP_TF1:Connected_Idle to SSP_TF2:Tx_Wait....324
7.16.8.6.2.3 Transition SSP_TF1:Connected_Idle to SSP_TF4:Transmit_DONE....325
7.16.8.6.3 SSP_TF2:Tx_Wait state....325
7.16.8.6.3.1 State description....325
7.16.8.6.3.2 Transition SSP_TF2:Tx_Wait to SSP_TF3:Transmit_Frame....325
7.16.8.6.3.3 Transition SSP_TF2:Tx_Wait to SSP_TF4:Transmit_DONE....325
7.16.8.6.4 SSP_TF3:Transmit_Frame state....325
7.16.8.6.4.1 State description....325
7.16.8.6.4.2 Transition SSP_TF3:Transmit_Frame to SSP_TF1:Connected_Idle....326
7.16.8.6.5 SSP_TF4:Transmit_DONE state....326
7.16.8.7 SSP_RF (receive frame control) state machine....326
7.16.8.8 SSP_RCM (receive frame credit monitor) state machine....327
7.16.8.9 SSP_RIM (receive interlocked frame monitor) state machine....327
7.16.8.10 SSP_TC (transmit credit control) state machine....328
7.16.8.11 SSP_TAN (transmit ACK/NAK control) state machine....328

This is a preview - click here to buy the full publication

7.17 STP link layer 328
7.17.1 STP frame transmission and reception 328
7.17.2 STP initiator phy throttling 329
7.17.3 STP flow control 329
7.17.4 Continued primitive sequence 332
7.17.5 Affiliations 332
7.17.6 Opening an STP connection 333
7.17.7 Closing an STP connection 334
7.17.8 STP connection management examples 334
7.17.9 STP (link layer for STP phys) state machines 336
7.17.10 SMP target port support 337
7.18 SMP link layer 337
7.18.1 SMP frame transmission and reception 337
7.18.2 SMP flow control 337
7.18.3 Closing an SMP connection 337
7.18.4 SMP (link layer for SMP phys) state machines 337
7.18.4.1 SMP state machines overview 337
7.18.4.2 SMP transmitter and receiver 337
7.18.4.3 SMP_IP (link layer for SMP initiator phys) state machine 338
7.18.4.3.1 SMP_IP state machine overview 338
7.18.4.3.2 SMP_IP1:Idle state 339
7.18.4.3.2.1 State description 339
7.18.4.3.2.2 Transition SMP_IP1:Idle to SMP_IP2:Transmit_Frame 339
7.18.4.3.3 SMP_IP2:Transmit_Frame state 339
7.18.4.3.3.1 State description 339
7.18.4.3.3.2 Transition SMP_IP2:Transmit_Frame to SMP_IP3:Receive_Frame 340
7.18.4.3.4 SMP_IP3:Receive_Frame state 340
7.18.4.4 SMP_TP (link layer for SMP target phys) state machine 340
7.18.4.4.1 SMP_TP state machine overview 340
7.18.4.4.2 SMP_TP1:Receive_Frame state 341
7.18.4.4.2.1 State description 341
7.18.4.4.2.2 Transition SMP_TP1:Receive_Frame to SMP_TP2:Transmit_Frame 342
7.18.4.4.3 SMP_TP2:Transmit_Frame state 342

8 Port layer 343
8.1 Port layer overview 343
8.2 PL (port layer) state machines 343
8.2.1 PL state machines overview 343
8.2.2 PL_OC (port layer overall control) state machine 345
8.2.2.1 PL_OC state machine overview 345
8.2.2.2 PL_OC1:Idle state 346
8.2.2.2.1 PL_OC1:Idle state description 346
8.2.2.2.2 Transition PL_OC1:Idle to PL_OC2:Overall_Control 347
8.2.2.3 PL_OC2:Overall_Control state 347
8.2.2.3.1 PL_OC2:Overall_Control state overview 347
8.2.2.3.2 PL_OC2:Overall_Control state establishing connections 347
8.2.2.3.3 PL_OC2:Overall_Control state connection established 350
8.2.2.3.4 PL_OC2:Overall_Control state unable to establish a connection 350
8.2.2.3.5 PL_OC2:Overall_Control state connection management 351
8.2.2.3.6 PL_OC2:Overall_Control state frame transmission 352
8.2.2.3.7 PL_OC2:Overall_Control state frame transmission cancellations 353
8.2.2.3.8 Transition PL_OC2:Overall_Control to PL_OC1:Idle 353
8.2.3 PL_PM (port layer phy manager) state machine 354
8.2.3.1 PL_PM state machine overview 354
8.2.3.2 PL_PM1:Idle state 356
8.2.3.2.1 PL_PM1:Idle state description 356
8.2.3.2.2 Transition PL_PM1:Idle to PL_PM2:Req_Wait 357
8.2.3.2.3 Transition PL_PM1:Idle to PL_PM3:Connected 357
8.2.3.3 PL_PM2:Req_Wait state 357
8.2.3.3.1 PL_PM2:Req_Wait state overview 357

This is a preview - click here to buy the full publication

8.2.3.3.2 PL_PM2:Req_Wait establishing a connection....357
8.2.3.3.3 PL_PM2:Req_Wait connection established....357
8.2.3.3.4 PL_PM2:Req_Wait unable to establish a connection....358
8.2.3.3.5 PL_PM2:Req_Wait connection management....358
8.2.3.3.6 Transition PL_PM2:Req_Wait to PL_PM1:Idle....358
8.2.3.3.7 Transition PL_PM2:Req_Wait to PL_PM3:Connected....358
8.2.3.3.8 Transition PL_PM2:Req_Wait to PL_PM4:Wait_For_Close....359
8.2.3.4 PL_PM3:Connected state....359
8.2.3.4.1 PL_PM3:Connected state description....359
8.2.3.4.2 Transition PL_PM3:Connected to PL_PM1:Idle....361
8.2.3.5 PL_PM4:Wait_For_Close state....361
8.2.3.5.1 PL_PM4:Wait_For_Close state description....361
8.2.3.5.2 Transition PL_PM4:Wait_For_Close to PL_PM1:Idle....361

9 Transport layer....362
9.1 Transport layer overview....362
9.2 SSP transport layer....362
9.2.1 SSP frame format....362
9.2.2 Information units....364
9.2.2.1 COMMAND frame - Command information unit....364
9.2.2.2 TASK frame - Task Management Function information unit....366
9.2.2.3 XFER_RDY frame - Transfer Ready information unit....367
9.2.2.4 DATA frame - Data information unit....368
9.2.2.5 RESPONSE frame - Response information unit....369
9.2.2.5.1 RESPONSE frame - Response information unit overview....369
9.2.2.5.2 Response information unit - NO_DATA format....371
9.2.2.5.3 Response information unit - RESPONSE_DATA format....371
9.2.2.5.4 Response information unit - SENSE_DATA format....372
9.2.3 Sequences of SSP frames....372
9.2.3.1 Sequences of SSP frames overview....372
9.2.3.2 Task management function sequence of SSP frames....372
9.2.3.3 Non-data command sequence of SSP frames....373
9.2.3.4 Write command sequence of SSP frames....373
9.2.3.5 Read command sequence of SSP frames....374
9.2.3.6 Bidirectional command sequence of SSP frames....374
9.2.4 SSP transport layer handling of link layer errors....375
9.2.4.1 SSP transport layer handling of link layer errors overview....375
9.2.4.2 COMMAND frame - handling of link layer errors....375
9.2.4.3 TASK frame - handling of link layer errors....376
9.2.4.4 XFER_RDY frame - handling of link layer errors....376
9.2.4.4.1 XFER_RDY frame overview....376
9.2.4.4.2 XFER_RDY frame with transport layer retries enabled....376
9.2.4.4.3 XFER_RDY frame with transport layer retries disabled....377
9.2.4.5 DATA frame - handling of link layer errors....377
9.2.4.5.1 DATA frame overview....377
9.2.4.5.2 DATA frame with transport layer retries enabled....377
9.2.4.5.3 DATA frame with transport layer retries disabled....378
9.2.4.6 RESPONSE frame - handling of link layer errors....378
9.2.5 SSP transport layer error handling summary....378
9.2.5.1 SSP transport layer error handling summary introduction....378
9.2.5.2 SSP initiator port transport layer error handling summary....378
9.2.5.3 SSP target port transport layer error handling summary....379
9.2.6 ST (transport layer for SSP ports) state machines....380
9.2.6.1 ST state machines overview....380
9.2.6.2 ST_I (transport layer for SSP initiator ports) state machines....381
9.2.6.2.1 ST_I state machines overview....381
9.2.6.2.2 ST_IFR (initiator frame router) state machine....383
9.2.6.2.2.1 ST_IFR state machine overview....383
9.2.6.2.2.2 Processing transport protocol service requests....383
9.2.6.2.2.3 Processing Frame Received confirmations....384

This is a preview - click here to buy the full publication

9.2.6.2.2.4 Processing Transmission Complete and Reception Complete messages 385
9.2.6.2.2.5 Processing miscellaneous requests 386
9.2.6.2.3 ST_ITS (initiator transport server) state machine 386
9.2.6.2.3.1 ST_ITS state machine overview 386
9.2.6.2.3.2 ST_ITS1:Initiator_Start state 387
9.2.6.2.3.2.1 State description 387
9.2.6.2.3.2.2 Transition ST_ITS1:Initiator_Start to ST_ITS3:Prepare_Command 387
9.2.6.2.3.2.3 Transition ST_ITS1:Initiator_Start to ST_ITS4:Prepare_Task 387
9.2.6.2.3.3 ST_ITS2:Initiator_Send_Frame state 388
9.2.6.2.3.3.3 Transition ST_ITS2:Initiator_Send_Frame to ST_ITS1:Initiator_Start 391
9.2.6.2.3.3.4 Transition ST_ITS2:Initiator_Send_Frame to ST_ITS5:Prepare_Data_Out 391
9.2.6.2.3.3.5 Transition ST_ITS2:Initiator_Send_Frame to ST_ITS6:Process_Data_In 391
9.2.6.2.3.4 ST_ITS3:Prepare_Command state 392
9.2.6.2.3.4.1 State description 392
9.2.6.2.3.4.2 Transition ST_ITS3:Prepare_Command to ST_ITS2:Initiator_Send_Frame 392
9.2.6.2.3.5 ST_ITS4:Prepare_Task state 392
9.2.6.2.3.5.1 State description 392
9.2.6.2.3.5.2 Transition ST_ITS4:Prepare_Task to ST_ITS2:Initiator_Send_Frame 393
9.2.6.2.3.6 ST_ITS5:Prepare_Data_Out state 393
9.2.6.2.3.6.1 State description 393
9.2.6.2.3.6.2 Transition ST_ITS5:Prepare_Data_Out to ST_ITS2:Intiator_Send_Frame 393
9.2.6.2.3.7 ST_ITS6:Receive_Data_In state 394
9.2.6.2.3.7.1 State description 394
9.2.6.2.3.7.2 Transition ST_ITS6:Receive_Data_In to ST_ITS1:Initiator_Start 395
9.2.6.2.3.7.3 Transition ST_ITS6:Receve_Data_In to ST_ITS2:Initiator_Send_Frame 395
9.2.6.3 ST_T (transport layer for SSP target ports) state machines 395
9.2.6.3.1 ST_T state machines overview 395
9.2.6.3.2 ST_TFR (target frame router) state machine 397
9.2.6.3.2.1 ST_TFR state machine overview 397
9.2.6.3.2.2 Processing Frame Received confirmations 397
9.2.6.3.2.3 Processing transport protocol service requests and responses 399
9.2.6.3.2.4 Processing miscellaneous requests and confirmations 401
9.2.6.3.3 ST_TTS (target transport server) state machine 402
9.2.6.3.3.1 ST_TTS state machine overview 402
9.2.6.3.3.2 ST_TTS1:Target_Start state 402
9.2.6.3.3.2.1 State description 402
9.2.6.3.3.2.2 Transition ST_TTS1:Target_Start to ST_TTS3:Prepare_Data_In 403
9.2.6.3.3.2.3 Transition ST_TTS1:Target_Start to ST_TTS4:Prepare_Xfer_Rdy 403
9.2.6.3.3.2.4 Transition ST_TTS1:Target_Start to ST_TTS5:Receive_Data_Out 403
9.2.6.3.3.2.5 Transition ST_TTS1:Target_Start to ST_TTS7:Prepare_Response 403
9.2.6.3.3.3 ST_TTS2:Target_Send_Frame state 403
9.2.6.3.3.3.1 Transition ST_TTS2:Target_Send_Frame to ST_TTS1:Target_Start 406
9.2.6.3.3.3.2 Transition ST_TTS2:Target_Send_Frame to ST_TTS3:Prepare_Data_In 406
9.2.6.3.3.3.3 Transition ST_TTS2:Target_Send_Frame to ST_TTS5:Receive_Data_Out 406
9.2.6.3.3.4 ST_TTS3:Prepare_Data_In state 406
9.2.6.3.3.4.1 State description 406
9.2.6.3.3.4.2 Transition ST_TTS3:Prepare_Data_In to ST_TTS2:Target_Send_Frame 407
9.2.6.3.3.5 ST_TTS4:Prepare_Xfer_Rdy state 407
9.2.6.3.3.5.1 State description 407
9.2.6.3.3.5.2 Transition ST_TTS4:Prepare_Xfer_Rdy to ST_TTS2:Target_Send_Frame 408
9.2.6.3.3.6 ST_TTS5:Receive_Data_Out state 408
9.2.6.3.3.6.1 State description 408
9.2.6.3.3.6.2 Transition ST_TTS5:Receive_Data_Out to ST_TTS1:Target_Start 409
9.2.6.3.3.6.3 Transition ST_TTS5:Receive_Data_Out to ST_TTS4:Prepare_Xfer_Rdy 409
9.2.6.3.3.7 ST_TTS6:Prepare_Response state 409
9.2.6.3.3.7.1 State description 409
9.2.6.3.3.7.2 Transition ST_TTS6:Prepare_Response to ST_TTS2:Target_Send_Frame 410
9.3 STP transport layer 410
9.3.1 Initial FIS 410
9.3.2 BIST Activate FIS 411

This is a preview - click here to buy the full publication

9.3.3 TT (transport layer for STP ports) state machines 411
9.4 SMP transport layer 411
9.4.1 SMP transport layer overview 411
9.4.2 SMP_REQUEST frame 412
9.4.3 SMP_RESPONSE frame 412
9.4.4 Sequence of SMP frames 413
9.4.5 MT (transport layer for SMP ports) state machines 413
9.4.5.1 SMP transport layer state machines overview 413
9.4.5.2 MT_IP (transport layer for SMP initiator ports) state machine 413
9.4.5.2.1 MT_IP state machine overview 413
9.4.5.2.2 MT_IP1:Idle state 414
9.4.5.2.2.1 State description 414
9.4.5.2.2.2 Transition MT_IP1:Idle to MT_IP2:Send 414
9.4.5.2.3 MT_IP2:Send state 415
9.4.5.2.3.1 State description 415
9.4.5.2.3.2 Transition MT_IP2:Send to MT_IP1:Idle 415
9.4.5.2.3.3 Transition MT_IP2:Send to MT_IP3:Receive 415
9.4.5.2.4 MT_IP3:Receive state 415
9.4.5.2.4.1 State description 415
9.4.5.2.4.2 Transition MT_IP3:Receive to MT_IP1:Idle 415
9.4.5.3 MT_TP (transport layer for SMP target ports) state machine 415
9.4.5.3.1 MT_TP state machine overview 415
9.4.5.3.2 MT_TP1:Idle state 416
9.4.5.3.2.1 State description 416
9.4.5.3.2.2 Transition MT_TP1:Idle to MT_TP2:Respond 416
9.4.5.3.3 MT_TP2:Respond state 416
9.4.5.3.3.1 State description 416
9.4.5.3.3.2 Transition MT_TP2:Respond to MT_TP1:Idle 417

10 Application layer 418
10.1 Application layer overview 418
10.2 SCSI application layer 418
10.2.1 SCSI transport protocol services 418
10.2.1.1 SCSI transport protocol services overview 418
10.2.1.2 Send SCSI Command transport protocol service 419
10.2.1.3 SCSI Command Received transport protocol service 420
10.2.1.4 Send Command Complete transport protocol service 421
10.2.1.5 Command Complete Received transport protocol service 421
10.2.1.6 Send Data-In transport protocol service 422
10.2.1.7 Data-In Delivered transport protocol service 423
10.2.1.8 Receive Data-Out transport protocol service 423
10.2.1.9 Data-Out Received transport protocol service 424
10.2.1.10 Terminate Data Transfer transport protocol service 424
10.2.1.11 Data Transfer Terminated transport protocol service 424
10.2.1.12 Send Task Management Request transport protocol service 425
10.2.1.13 Task Management Request Received transport protocol service 425
10.2.1.14 Task Management Function Executed transport protocol service 426
10.2.1.15 Received Task Management Function Executed transport protocol service 427
10.2.2 Application client error handling 428
10.2.3 Device server error handling 429
10.2.4 Task router and task manager error handling 429
10.2.5 SCSI transport protocol event notifications 430
10.2.6 SCSI commands 430
10.2.6.1 INQUIRY command 430
10.2.6.2 LOG SELECT and LOG SENSE commands 430
10.2.6.3 MODE SELECT and MODE SENSE commands 430
10.2.6.4 START STOP UNIT command 430
10.2.7 SCSI mode parameters 430
10.2.7.1 Disconnect-Reconnect mode page 430
10.2.7.1.1 Disconnect-Reconnect mode page overview 430

This is a preview - click here to buy the full publication

10.2.7.1.2 BUS INACTIVITY TIME LIMIT field 431
10.2.7.1.3 MAXIMUM CONNECT TIME LIMIT field 432
10.2.7.1.4 MAXIMUM BURST SIZE field 432
10.2.7.1.5 FIRST BURST SIZE field 432
10.2.7.2 Protocol-Specific Port mode page 433
10.2.7.2.1 Protocol-Specific Port mode page overview 433
10.2.7.2.2 Protocol-Specific Port mode page - short format 433
10.2.7.2.3 Protocol-Specific Port mode page - Phy Control And Discover subpage 434
10.2.7.3 Protocol-Specific Logical Unit mode page 437
10.2.7.3.1 Protocol-Specific Logical Unit mode page overview 437
10.2.7.3.2 Protocol-Specific Logical Unit mode page - short format 437
10.2.8 SCSI log parameters 438
10.2.8.1 Protocol-Specific Port log page 438
10.2.9 SCSI diagnostic parameters 441
10.2.9.1 Protocol-Specific diagnostic page 441
10.2.10 SCSI power conditions 443
10.2.10.1 SCSI power conditions overview 443
10.2.10.2 SA_PC (SCSI application layer power condition) state machine 443
10.2.10.2.1 SA_PC state machine overview 443
10.2.10.2.2 SA_PC_0:Powered_On state 444
10.2.10.2.2.1 State description 444
10.2.10.2.2.2 Transition SA_PC_0:Powered_On to SA_PC_4:Stopped 444
10.2.10.2.2.3 Transition SA_PC_0:Powered_On to SA_PC_5:Active_Wait 444
10.2.10.2.3 SA_PC_1:Active state 445
10.2.10.2.3.1 State description 445
10.2.10.2.3.2 Transition SA_PC_1:Active to SA_PC_2:Idle 445
10.2.10.2.3.3 Transition SA_PC_1:Active to SA_PC_3:Standby 445
10.2.10.2.3.4 Transition SA_PC_1:Active to SA_PC_4:Stopped 445
10.2.10.2.4 SA_PC_2:Idle state 445
10.2.10.2.4.1 State description 445
10.2.10.2.4.2 Transition SA_PC_2:Idle to SA_PC_1:Active 445
10.2.10.2.4.3 Transition SA_PC_2:Idle to SA_PC_3:Standby 445
10.2.10.2.4.4 Transition SA_PC_2:Idle to SA_PC_4:Stopped 445
10.2.10.2.5 SA_PC_3:Standby state 445
10.2.10.2.5.1 State description 445
10.2.10.2.5.2 Transition SA_PC_3:Standby to SA_PC_4:Stopped 446
10.2.10.2.5.3 Transition SA_PC_3:Standby to SA_PC_5:Active_Wait 446
10.2.10.2.5.4 Transition SA_PC_3:Standby to SA_PC_6:Idle_Wait 446
10.2.10.2.6 SA_PC_4:Stopped state 446
10.2.10.2.6.1 State description 446
10.2.10.2.6.2 Transition SA_PC_4:Stopped to SA_PC_3:Standby 446
10.2.10.2.6.3 Transition SA_PC_4:Stopped to SA_PC_5:Active_Wait 446
10.2.10.2.6.4 Transition SA_PC_4:Stopped to SA_PC_6:Idle_Wait 446
10.2.10.2.7 SA_PC_5:Active_Wait state 446
10.2.10.2.7.1 State description 446
10.2.10.2.7.2 Transition SA_PC_5:Active_Wait to SA_PC_1:Active 447
10.2.10.2.7.3 Transition SA_PC_5:Active_Wait to SA_PC_3:Standby 447
10.2.10.2.7.4 Transition SA_PC_5:Active_Wait to SA_PC_4:Stopped 447
10.2.10.2.7.5 Transition SA_PC_5:Active_Wait to SA_PC_6:Idle_Wait 447
10.2.10.2.8 SA_PC_6:Idle_Wait state 447
10.2.10.2.8.1 State description 447
10.2.10.2.8.2 Transition SA_PC_6:Idle_Wait to SA_PC_2:Idle 447
10.2.10.2.8.3 Transition SA_PC_6:Idle_Wait to SA_PC_3:Standby 447
10.2.10.2.8.4 Transition SA_PC_6:Idle_Wait to SA_PC_4:Stopped 447
10.2.10.2.8.5 Transition SA_PC_6:Idle_Wait to SA_PC_5:Active_Wait 448
10.2.11 SCSI vital product data (VPD) 448
10.3 ATA application layer 449
10.4 Management application layer 449
10.4.1 READY LED signal behavior 449
10.4.2 Management protocol services 450

This is a preview - click here to buy the full publication

10.4.3 SMP functions....451
10.4.3.1 SMP function request frame format....451
10.4.3.2 SMP function response frame format....453
10.4.3.3 REPORT GENERAL function....455
10.4.3.4 REPORT MANUFACTURER INFORMATION function....458
10.4.3.5 DISCOVER function....460
10.4.3.6 REPORT PHY ERROR LOG function....467
10.4.3.7 REPORT PHY SATA function....469
10.4.3.8 REPORT ROUTE INFORMATION function....471
10.4.3.9 CONFIGURE ROUTE INFORMATION function....473
10.4.3.10 PHY CONTROL function....474
10.4.3.11 PHY TEST FUNCTION function....478

Annex A (normative) Jitter tolerance patterns....482
A.1 Jitter tolerance pattern (JTPAT)....482
A.2 Compliant jitter tolerance pattern (CJTPAT)....484

Annex B (normative) Signal performance measurements....489
B.1 Signal performance measurements overview....489
B.2 Simple physical link....489
B.2.1 Simple physical link overview....489
B.2.2 Assumptions for the structure of the transmitter device and the receiver device....490
B.2.3 Definition of receiver sensitivity and receiver device sensitivity....491
B.3 Measurement architecture requirements....492
B.3.1 General....492
B.3.2 Relationship between signal compliance measurements at interoperability points and operation in systems....492
B.4 De-embedding connectors in test fixtures....493
B.5 Measurement conditions for signal output at the transmitter device....493
B.6 Measurement conditions for signal tolerance at the transmitter device....494
B.7 Measurement conditions for signal output at the receiver device....495
B.8 Measurement conditions for signal tolerance at the receiver device....496
B.9 S-parameter measurements....496
B.9.1 S-parameter overview....496
B.9.2 S-parameter naming conventions....497
B.9.3 Use of single-ended instrumentation in differential applications....497
B.9.4 Measurement configurations for physical link elements....498
B.9.4.1 Measurement configuration overview....498
B.9.4.2 Transmitter device return loss....499
B.9.4.3 Receiver device return loss....500
B.9.4.4 Return loss (S_{11}) at IT or CT....500
B.9.4.5 Upstream return loss (S_{22}) at IR or CR....501
B.9.5 Summary for S-parameter measurements....502

Annex C (informative) SAS to SAS phy reset sequence examples....503

Annex D (informative) CRC....508
D.1 CRC generator and checker implementation examples....508
D.2 CRC implementation in C....508
D.3 CRC implementation with XORs....509
D.4 CRC examples....511

Annex E (informative) SAS address hashing....512
E.1 SAS address hashing overview....512
E.2 Hash collision probability....512
E.3 Hash generation....512
E.4 Hash implementation in C....513
E.5 Hash implementation with XORs....513
E.6 Hash examples....514

This is a preview - click here to buy the full publication

Annex F (informative) Scrambling 518
F.1 Scrambler implementation example 518
F.2 Scrambler implementation in C 518
F.3 Scrambler implementation with XORs 519
F.4 Scrambler examples 520

Annex G (informative) ATA architectural notes 521
G.1 STP differences from Serial ATA (SATA) 521
G.2 STP differences from Serial ATA II 521
G.3 Affiliation policies 521
G.3.1 Affiliation policies overview 521
G.3.2 Affiliation policy for static STP initiator port to STP target port mapping 522
G.3.3 Affiliation policy with SATA queued commands and multiple STP initiator ports 522
G.3.4 Applicability of affiliation for STP target ports 522
G.4 SATA port selector considerations 522
G.5 SATA device not transmitting initial Register Device-to-Host FIS 522

Annex H (informative) ALIGN and/or NOTIFY insertion rate summary 523

Annex I (informative) Expander device handling of connections 524
I.1 Expander device handling of connections overview 524
I.2 Connection request - OPEN_ACCEPT 526
I.3 Connection request - OPEN_REJECT by end device 527
I.4 Connection request - OPEN_REJECT by expander device 528
I.5 Connection request - arbitration lost 529
I.6 Connection request - backoff and retry 530
I.7 Connection request - backoff and reverse path 531
I.8 Connection close - single step 532
I.9 Connection close - simultaneous 533
I.10 BREAK handling during path arbitration 534
I.11 BREAK handling during connection 535
I.12 STP connection - originated by STP initiator port 536
I.13 STP connection - originated by STP target port in an STP/SATA bridge 537
I.14 STP connection close - originated by STP initiator port 538
I.15 STP connection close - originated by STP target port in an STP/SATA bridge 539
I.16 Connection request - XL1:Request_Path to XL5:Forward_Open transition 540
I.17 Pathway blocked and pathway recovery example 541

Annex J (informative) Primitive encoding 542

Annex K (informative) Messages between state machines 545
K.1 Messages between phy layer and other layers 545
K.2 Messages between link layer, port layer, and management application layer for all protocols 545
K.3 Messages between link layer, port layer, and transport layer for SSP 547
K.4 Messages between link layer, port layer, and transport layer for SMP 549
K.5 Messages from transport layer to application layer for SSP 550
K.6 Messages from transport layer to application layer for SMP 551

Annex (informative) L Discover process example implementation 552
L.1 Discover process example implementation overview 552
L.2 Header file 552
L.3 Source file 568

Annex M SAS icon 588

Bibliography 589

This is a preview - click here to buy the full publication

Tables

Page

Table 1 — ISO and American numbering conventions 59
Table 2 — Multiplicity notation in class diagrams 60
Table 3 — Data dword containing a value 66
Table 4 — Data dword containing four one-byte fields 66
Table 5 — Names and identifiers 87
Table 6 — SAM-3 attribute mapping 87
Table 7 — SAS address format 87
Table 8 — Hashed SAS address code parameter 88
Table 9 — Expander phy to ECM requests 106
Table 10 — Expander phy to ECM responses 107
Table 11 — ECM to expander phy confirmations 107
Table 12 — Expander phy to ECR to expander phy requests and indications 108
Table 13 — Expander phy to ECR to expander phy responses and confirmations 109
Table 14 — Expander phy to BPP requests 110
Table 15 — BPP to expander phy indications 110
Table 16 — Routing attributes and routing methods 111
Table 17 — Expander route table levels for edge expander device R or fanout expander device R 119
Table 18 — Expander route table levels for edge expander device N 119
Table 19 — Expander route entries for edge expander E0 phy 1 120
Table 20 — Expander route entries for fanout expander device F phy 0 121
Table 21 — Connectors 126
Table 22 — SAS Drive connector pin assignments 129
Table 23 — Controller SAS 4i connector pin assignments and physical link usage 131
Table 24 — Backplane SAS 4i connector pin assignments and physical link usage 132
Table 25 — Controller Mini SAS 4i connector pin assignments and physical link usage 134
Table 26 — Backplane Mini SAS 4i connector pin assignments and physical link usage 135
Table 27 — SAS 4x cable plug connector icons 136
Table 28 — SAS 4x receptacle connector icons 137
Table 29 — SAS 4x connector pin assignments and physical link usage 138
Table 30 — Mini SAS 4x cable plug connector icons and key slot positions 139
Table 31 — Mini SAS 4x receptacle connector icons and key positions 141
Table 32 — Mini SAS 4x connector pin assignments and physical link usage 143
Table 33 — Requirements for internal cable assemblies using SAS Drive connectors and backplanes 157
Table 34 — Requirements for SAS internal cable assemblies using SAS 4i or Mini SAS 4i 158
Table 35 — Additional requirements for cable assemblies using SAS 4i 159
Table 36 — Additional requirements for cable assemblies using Mini SAS 4i 159
Table 37 — Requirements for external cable assemblies 160
Table 38 — Additional requirements for external cable assemblies using SAS 4x 161
Table 39 — Additional requirements for external cable assemblies using Mini SAS 4x 161
Table 40 — Compliance points 162
Table 41 — General electrical characteristics 175
Table 42 — General transmitter device electrical characteristics 175
Table 43 — Receiver device general electrical characteristics 176
Table 44 — Transmitter device signal output characteristics as measured with the zero-length test load at transmitter device compliance points IT and CT 181
Table 45 — Transmitter device signal output characteristics as measured with each test load at transmitter device compliance points IT and CT 182
Table 46 — Transmitter device maximum jitter as measured with each test load at transmitter device compliance points IT and CT 183
Table 47 — Delivered signal characteristics as measured with the zero length test load at receiver device compliance points IR and CR 184
Table 48 — Maximum delivered jitter at receiver device compliance points IR and CR 186
Table 49 — Receiver device jitter tolerance at receiver device compliance points IR and CR 187
Table 50 — Output characteristics of the READY LED signal 188
Table 51 — Bit designations 189
Table 52 — Conversion from byte notation to character name example 190
Table 53 — Data characters 191
Table 54 — Control characters 196

This is a preview - click here to buy the full publication

Table 55 — Control character usage 197
Table 56 — Delayed code violation example 197
Table 57 — OOB signal timing specifications 200
Table 58 — OOB signal transmitter device requirements 200
Table 59 — OOB signal receiver device burst time detection requirements 202
Table 60 — OOB signal receiver device idle time detection requirements 202
Table 61 — OOB signal receiver device negation time detection requirements 202
Table 62 — SATA port selection signal transmitter device requirements 204
Table 63 — Phy reset sequence timing specifications 205
Table 64 — SATA speed negotiation sequence timing specifications 206
Table 65 — SAS speed negotiation sequence timing specifications 209
Table 66 — SP state machine timers 215
Table 67 — SP_DWS timers 231
Table 68 — Primitive format 237
Table 69 — Primitives not specific to type of connection 237
Table 70 — Primitives used only inside SSP and SMP connections 239
Table 71 — Primitives used only inside STP connections and on SATA physical links 240
Table 72 — Primitive encoding for primitives not specific to type of connection 241
Table 73 — Primitive encoding for primitives used only inside SSP and SMP connections 243
Table 74 — Primitive encoding for primitives used only inside STP connections and on SATA physical links 244
Table 75 — Primitive sequences 245
Table 76 — AIP primitives 249
Table 77 — ALIGN primitives 249
Table 78 — BROADCAST primitives 250
Table 79 — CLOSE primitives 251
Table 80 — NOTIFY primitives 252
Table 81 — OPEN_REJECT abandon primitives 253
Table 82 — OPEN_REJECT retry primitives 254
Table 83 — DONE primitives 255
Table 84 — NAK primitives 256
Table 85 — RRDY primitives 256
Table 86 — Clock skew management ALIGN insertion requirement 257
Table 87 — CRC polynomials 259
Table 88 — Scrambling for different data dword types 262
Table 89 — Address frame format 267
Table 90 — ADDRESS FRAME TYPE field 267
Table 91 — IDENTIFY address frame format 268
Table 92 — DEVICE TYPE field 268
Table 93 — OPEN address frame format 270
Table 94 — PROTOCOL field 270
Table 95 — CONNECTION RATE field 271
Table 96 — ARBITRATION WAIT TIME field 272
Table 97 — SL_IR_IRC timers 273
Table 98 — Connection Results of a connection request 280
Table 99 — Arbitration priority for OPEN address frames passing on a physical link 281
Table 100 — Arbitration priority for contending Request Path requests in the ECM when all requests have Retry Priority Status arguments of NORMAL 282
Table 101 — Arbitration priority for contending Request Path requests in the ECM among requests with Retry Priority Status arguments of IGNORE AWT 282
Table 102 — Pathway recovery priority 285
Table 103 — Results of aborting a connection request 285
Table 104 — Results of closing a connection 287
Table 105 — Results of breaking a connection 288
Table 106 — Rate matching ALIGN and/or NOTIFY insertion requirements 289
Table 107 — SL_CC timers 295
Table 108 — XL timers 301
Table 109 — SSP frame interlock requirements 315
Table 110 — SSP link layer timers 319
Table 111 — STP link layer differences from SATA link layer during an STP connection 329

This is a preview - click here to buy the full publication

Table 112 — PL_OC state machine timers 345
Table 113 — Confirmations from Unable To Connect or Retry Open messages 351
Table 114 — PL_PM state machine timers 354
Table 115 — Messages from Open Failed confirmations 358
Table 116 — SSP frame format 362
Table 117 — FRAME TYPE field 363
Table 118 — COMMAND frame - Command information unit 365
Table 119 — TASK ATTRIBUTE field 365
Table 120 — TASK frame - Task Management Function information unit 366
Table 121 — TASK MANAGEMENT FUNCTION field 367
Table 122 — XFER_RDY frame - Transfer Ready information unit 368
Table 123 — DATA frame - Data information unit 368
Table 124 — RESPONSE frame - Response information unit 370
Table 125 — DATAPRES field 370
Table 126 — RESPONSE DATA field 371
Table 127 — RESPONSE CODE field 371
Table 128 — Sequences of SSP frames 372
Table 129 — Confirmations sent to the SCSI application layer if a frame transmission or reception error occurs 386
Table 130 — ST_ITS state machine variables 387
Table 131 — ST_ITS state machine arguments 387
Table 132 — Messages sent to the ST_IFR state machine 389
Table 133 — Transmission Complete messages for XFER_RDY frame verification failures 390
Table 134 — Reception Complete messages for read DATA frame verification failures 394
Table 135 — ST_T state machine timers 395
Table 136 — Task Management Function Executed Service Response argument mapping to Service Response argument 400
Table 137 — Confirmations sent to the SCSI application layer 401
Table 138 — ST_TTS state machine variables 402
Table 139 — ST_TTS state machine arguments 402
Table 140 — Messages sent to the ST_TFR state machine 405
Table 141 — Reception Complete message for write DATA frame verification failures 408
Table 142 — Request argument to RESPONSE frame RESPONSE DATA field mapping 410
Table 143 — SMP frame format 411
Table 144 — SMP FRAME TYPE field 411
Table 145 — SMP_REQUEST frame format 412
Table 146 — SMP_RESPONSE frame format 412
Table 147 — MT_IP timers 413
Table 148 — SCSI architecture mapping 419
Table 149 — Send SCSI Command transport protocol service arguments 420
Table 150 — SCSI Command Received transport protocol service arguments 420
Table 151 — Send Command Complete transport protocol service arguments 421
Table 152 — Command Complete Received transport protocol service arguments 422
Table 153 — Send Data-In transport protocol service arguments 423
Table 154 — Data-In Delivered transport protocol service arguments 423
Table 155 — Receive Data-Out transport protocol service arguments 424
Table 156 — Data-Out Received transport protocol service arguments 424
Table 157 — Terminate Data Transfer transport protocol service arguments 424
Table 158 — Data Transfer Terminated transport protocol service arguments 425
Table 159 — Send Task Management Request transport protocol service arguments 425
Table 160 — Task Management Request Received transport protocol service arguments 426
Table 161 — Task Management Function Executed transport protocol service arguments 427
Table 162 — Received Task Management Function Executed transport protocol service arguments 428
Table 163 — Delivery Result to additional sense code mapping 429
Table 164 — SCSI transport protocol events 430
Table 165 — Disconnect-Reconnect mode page for SSP 431
Table 166 — Protocol-Specific Port mode page subpages 433
Table 167 — Protocol-Specific Port mode page for SAS SSP - short format 433
Table 168 — I_T NEXUS LOSS TIME field 434
Table 169 — Protocol-Specific Port mode page for SAS SSP - Phy Control And Discover subpage 435

This is a preview - click here to buy the full publication

Table 170 — SAS phy mode descriptor 436
Table 171 — Protocol-Specific Logical Unit mode page subpages 437
Table 172 — Protocol-Specific Logical Unit mode page for SAS SSP - short format 437
Table 173 — Protocol-Specific Port log page for SAS 438
Table 174 — Protocol-Specific Port log parameter for SAS 439
Table 175 — Parameter control byte in the Protocol-Specific Port log parameter for SAS 439
Table 176 — SAS phy log descriptor 440
Table 177 — Protocol-Specific diagnostic page for SAS 441
Table 178 — PHY TEST FUNCTION field 442
Table 179 — PHY TEST PATTERN field 442
Table 180 — PHY TEST PATTERN PHYSICAL LINK RATE field 443
Table 181 — Device Identification VPD page identification descriptors for the SAS target port 448
Table 182 — Device Identification VPD page identification descriptors for the SAS target device 449
Table 183 — READY LED signal behavior 450
Table 184 — SMP request frame format 451
Table 185 — SMP functions (FUNCTION field) 452
Table 186 — SMP response frame format 453
Table 187 — FUNCTION RESULT field 454
Table 188 — REPORT GENERAL request 456
Table 189 — REPORT GENERAL response 457
Table 190 — REPORT MANUFACTURER INFORMATION request 458
Table 191 — REPORT MANUFACTURER INFORMATION response 459
Table 192 — DISCOVER request 461
Table 193 — DISCOVER response 461
Table 194 — ATTACHED DEVICE TYPE field 462
Table 195 — NEGOTIATED PHYSICAL LINK RATE field 463
Table 196 — ATTACHED SATA PORT SELECTOR and ATTACHED SATA DEVICE bits 464
Table 197 — PROGRAMMED MINIMUM PHYSICAL LINK RATE and PROGRAMMED MAXIMUM PHYSICAL LINK rate fields 466
Table 198 — HARDWARE MINIMUM PHYSICAL LINK RATE and HARDWARE MAXIMUM PHYSICAL LINK RATE fields 466
Table 199 — ROUTING ATTRIBUTE field 467
Table 200 — REPORT PHY ERROR LOG request 467
Table 201 — REPORT PHY ERROR LOG response 468
Table 202 — REPORT PHY SATA request 469
Table 203 — REPORT PHY SATA response 470
Table 204 — REPORT ROUTE INFORMATION request 471
Table 205 — REPORT ROUTE INFORMATION response 472
Table 206 — CONFIGURE ROUTE INFORMATION request 473
Table 207 — CONFIGURE ROUTE INFORMATION response 474
Table 208 — PHY CONTROL request 475
Table 209 — PHY OPERATION field 476
Table 210 — PROGRAMMED MINIMUM PHYSICAL LINK RATE and PROGRAMMED MAXIMUM PHYSICAL LINK RATE fields 477
Table 211 — PHY CONTROL response 478
Table 212 — PHY TEST FUNCTION request 479
Table 213 — PHY TEST FUNCTION field 480
Table 214 — PHY TEST PATTERN PHYSICAL LINK RATE field 480
Table 215 — PHY TEST FUNCTION response 481
Table A.1 — JTPAT for RD+ 482
Table A.2 — JTPAT for RD- 483
Table A.3 — JTPAT for RD+ and RD- 484
Table A.4 — CJTPAT scrambled in an SSP DATA frame 485
Table D.1 — CRC examples 511
Table E.1 — Monte-Carlo simulation results 512
Table E.2 — Hash results for simple SAS addresses 514
Table E.3 — Hash results for realistic SAS addresses 515
Table E.4 — Hash results for a walking ones pattern 516
Table E.5 — Hash results for a walking zeros pattern 517
Table F.1 — Scrambler examples 520
Table H.1 — ALIGN and/or NOTIFY insertion rate examples 523

This is a preview - click here to buy the full publication

Table I.1 — Column descriptions for connection examples 525
Table J.1 — Primitives with Hamming distance of 8 542
Table K.1 — Requests from management application layer or link layer to phy layer 545
Table K.2 — Confirmations from phy layer to link layer 545
Table K.3 — Requests between link layer and port layer 545
Table K.4 — Confirmations between link layer and port layer 546
Table K.5 — Requests from management application layer to link layer 546
Table K.6 — Confirmations between link layer and port layer, link layer, or application layer 547
Table K.7 — Requests between link layer, port layer, and transport layer for SSP 547
Table K.8 — Confirmations from port layer to transport layer for SSP 547
Table K.9 — Confirmations between SL link layer, port layer, and SSP transport layer 548
Table K.10 — Confirmations between SSP link layer, port layer, and SSP transport layer 549
Table K.11 — Requests between SL/SMP link layer, port layer, and SMP transport layer 549
Table K.12 — Confirmations between link layer, port layer, and SMP transport layer 550
Table K.13 — Requests and responses from SCSI application layer to SSP transport layer 550
Table K.14 — Confirmations and indications from SSP transport layer to SCSI application layer 551
Table K.15 — Requests from management application layer to SMP transport layer 551
Table K.16 — Confirmations from SMP transport layer to management application layer 551
Table L.1 — C program files 552

This is a preview - click here to buy the full publication

Figures

Page

Figure 1 — SCSI document relationships 31
Figure 2 — ATA document relationships 32
Figure 3 — Classes in class diagrams 60
Figure 4 — Association relationships in class diagrams 61
Figure 5 — Aggregation relationships in class diagrams 61
Figure 6 — Generalization relationships in class diagrams 62
Figure 7 — Dependency relationships in class diagrams 62
Figure 8 — Objects in object diagrams 63
Figure 9 — State machine conventions 64
Figure 10 — SAS domain class diagram 68
Figure 11 — Physical links and phys 69
Figure 12 — Phy class diagram 70
Figure 13 — Phy object diagram 71
Figure 14 — Ports (narrow ports and wide ports) 72
Figure 15 — Port class diagram 73
Figure 16 — Port object diagram 74
Figure 17 — SAS devices 75
Figure 18 — Expander device 76
Figure 19 — Expander device class diagram 77
Figure 20 — Domains 78
Figure 21 — SAS domain bridging to ATA domains 78
Figure 22 — SAS domains bridging to ATA domains with SATA port selectors 79
Figure 23 — Devices spanning SAS domains 80
Figure 24 — Edge expander device set 81
Figure 25 — Maximum expander device set topology 82
Figure 26 — Fanout expander device topology 83
Figure 27 — Edge expander device set to edge expander device set topology 84
Figure 28 — Potential pathways 85
Figure 29 — Multiple connections on wide ports 86
Figure 30 — State machines for SAS devices 90
Figure 31 — State machines for expander devices 91
Figure 32 — Transmit data path in a SAS phy 92
Figure 33 — SSP link, port, SSP transport and SCSI application layer state machines 93
Figure 34 — SMP link, port, SMP transport and management application layer state machines 94
Figure 35 — STP link, port, STP transport and ATA application layer state machines 95
Figure 36 — Transmit data path and state machines in an expander phy 96
Figure 37 — Receive data path in a SAS phy 97
Figure 38 — Receive data path in an expander phy 98
Figure 39 — State machines and SAS device, SAS port and SAS phy classes 99
Figure 40 — State machine and expander device, expander port and expander phy classes 100
Figure 41 — Reset terminology 101
Figure 42 — Expander device model 103
Figure 43 — Expander device interfaces 105
Figure 44 — Expander device interface detail 106
Figure 45 — Expander route table example 112
Figure 46 — Level-order traversal example 113
Figure 47 — Examples of invalid topologies 115
Figure 48 — Expander route index levels example 117
Figure 49 — Expander route index levels example with fanout expander device 118
Figure 50 — Expander route index order example 120
Figure 51 — SATA connectors and cables 122
Figure 52 — SAS Drive cable environments 123
Figure 53 — SAS Drive backplane environment 123
Figure 54 — SAS external cable environment 124
Figure 55 — SAS internal symmetric cable environment - controller to backplane 124
Figure 56 — SAS internal symmetric cable environment - controller to controller 124
Figure 57 — SAS internal controller-based fanout cable environment 125
Figure 58 — SAS internal backplane-based fanout cable environment 125

This is a preview - click here to buy the full publication

Figure 59 — SAS Drive plug connector 127
Figure 60 — Single-port SAS Drive cable receptacle connector 127
Figure 61 — Dual-port SAS Drive cable receptacle connector 128
Figure 62 — SAS Drive backplane receptacle connector 128
Figure 63 — SAS 4i cable receptacle connector 130
Figure 64 — SAS 4i plug connector 130
Figure 65 — Mini SAS 4i cable plug connector 133
Figure 66 — Mini SAS 4i receptacle connector 133
Figure 67 — SAS 4x cable plug connector 136
Figure 68 — SAS 4x receptacle connector 137
Figure 69 — Mini SAS 4x cable plug connector 139
Figure 70 — Mini SAS 4x cable plug connector that attaches to an enclosure out port 140
Figure 71 — Mini SAS 4x cable plug connector that attaches to an enclosure in port 140
Figure 72 — Mini SAS 4x receptacle connector 141
Figure 73 — Mini SAS 4x receptacle connector - end device 142
Figure 74 — Mini SAS 4x receptacle connector - enclosure out port 142
Figure 75 — Mini SAS 4x receptacle connector - enclosure in port 142
Figure 76 — Single-port SAS Drive cable assembly 144
Figure 77 — Dual-port SAS Drive cable assembly 144
Figure 78 — SAS internal symmetric cable assembly - SAS 4i 145
Figure 79 — SAS internal symmetric cable assembly - Mini SAS 4i 146
Figure 80 — SAS internal symmetric cable assembly - SAS 4i to Mini SAS 4i 147
Figure 81 — SAS internal controller-based fanout cable assembly - SAS 4i 149
Figure 82 — SAS internal controller-based fanout cable assembly - Mini SAS 4i 150
Figure 83 — SAS internal backplane-based fanout cable assembly - SAS 4i 151
Figure 84 — SAS internal backplane-based fanout cable assembly - Mini SAS 4i 152
Figure 85 — SAS external cable assembly - SAS 4x 153
Figure 86 — SAS external cable assembly - Mini SAS 4x 154
Figure 87 — SAS external cable assembly with Mini SAS 4x cable plug connectors 155
Figure 88 — SAS external cable assembly - SAS 4x to Mini SAS 4x 156
Figure 89 — SAS 4x and Mini SAS 4x cable assembly CT and CR compliance points 163
Figure 90 — Backplane IT and IR compliance points 164
Figure 91 — Backplane compliance points with SATA phy attached 165
Figure 92 — SAS 4i and Mini SAS 4i cable assembly IT and IR compliance points 166
Figure 93 — SAS 4i and Mini SAS 4i cable and backplane IT and IR compliance points 167
Figure 94 — Internal cable and backplane IT and IR compliance points with SATA device attached 168
Figure 95 — Internal cable IT and IR compliance points 169
Figure 96 — Zero-length test load for transmitter device compliance point 170
Figure 97 — Zero-length test load for receiver device compliance point 170
Figure 98 — TCTF test load 171
Figure 99 — TCTF test load S_{DD21} and ISI loss requirements at 3,0 Gbit/s 172
Figure 100 — TCTF test load S_{DD21} and ISI loss requirements at 1,5 Gbit/s 173
Figure 101 — Low-loss TCTF test load 173
Figure 102 — Low-loss TCTF test load S_{DD21} and ISI loss requirements at 3,0 Gbit/s 174
Figure 103 — Transmitter device transient test circuit 177
Figure 104 — Receiver device transient test circuit 177
Figure 105 — Transmitter device eye mask 178
Figure 106 — Receiver device eye mask 178
Figure 107 — Deriving a receiver device jitter tolerance eye mask 179
Figure 108 — Applied sinusoidal jitter 180
Figure 109 — SAS bit transmission logic 198
Figure 110 — SAS bit reception logic 199
Figure 111 — OOB signal transmission 201
Figure 112 — OOB signal detection 203
Figure 113 — SATA port selection signal 204
Figure 114 — SATA OOB sequence 205
Figure 115 — SATA speed negotiation sequence 205
Figure 116 — SAS to SATA OOB sequence 207
Figure 117 — SAS to SAS OOB sequence 208
Figure 118 — SAS speed negotiation window 209

This is a preview - click here to buy the full publication

Figure 119 — SAS speed negotiation sequence (phy A: G1, G2, G3, phy B: G2 only) 211
Figure 120 — SAS speed negotiation sequence - phy reset problem 212
Figure 121 — Hot-plug and the phy reset sequence 213
Figure 122 — SP (phy layer) state machine - OOB sequence states 216
Figure 123 — SP (phy layer) state machine - SAS speed negotiation states 221
Figure 124 — SP (phy layer) state machine - SATA host emulation states 226
Figure 125 — SP (phy layer) state machine – SATA port selector state 229
Figure 126 — SP (phy layer) state machine - SATA spinup hold state 230
Figure 127 — SP_DWS (phy layer dword synchronization) state machine 232
Figure 128 — Transmitting a repeated primitive sequence 245
Figure 129 — Receiving a repeated primitive sequence 246
Figure 130 — Triple primitive sequence 247
Figure 131 — Redundant primitive sequence 248
Figure 132 — Elasticity buffers 257
Figure 133 — Address frame, SSP frame and SMP frame CRC bit ordering 260
Figure 134 — STP frame CRC bit ordering 261
Figure 135 — Transmit path bit ordering 263
Figure 136 — Receive path bit ordering 264
Figure 137 — STP transmit path bit ordering 265
Figure 138 — STP receive path bit ordering 266
Figure 139 — Address frame transmission 266
Figure 140 — SL_IR (link layer identification and hard reset) state machines 274
Figure 141 — Aborting a connection request with BREAK 286
Figure 142 — Connection request timeout example 287
Figure 143 — Closing a connection example 288
Figure 144 — Rate matching example 290
Figure 145 — SL (link layer for SAS phys) state machines (part 1) 292
Figure 146 — SL (link layer for SAS phys) state machines (part 2) 293
Figure 147 — XL (link layer for expander phys) state machine (part 1) 302
Figure 148 — XL (link layer for expander phys) state machine (part 2) 303
Figure 149 — XL (link layer for expander phys) state machine (part 3) 304
Figure 150 — SSP frame transmission 314
Figure 151 — Interlocked frames 316
Figure 152 — Non-interlocked frames with the same tag 316
Figure 153 — Non-interlocked frames with different tags 317
Figure 154 — Closing an SSP connection example 318
Figure 155 — SSP (link layer for SSP phys) state machines (part 1 - frame transmission) 320
Figure 156 — SSP (link layer for SSP phys) state machines (part 2 - frame reception) 321
Figure 157 — STP frame transmission 328
Figure 158 — STP flow control 331
Figure 159 — Transmitting a continued primitive sequence 332
Figure 160 — Receiving a continued primitive sequence 332
Figure 161 — STP initiator port opening an STP connection 335
Figure 162 — STP target port opening an STP connection 336
Figure 163 — SMP frame transmission 337
Figure 164 — SMP_IP (link layer for SMP initiator phys) state machine 339
Figure 165 — SMP_TP (link layer for SMP target phys) state machine 341
Figure 166 — Port layer examples 344
Figure 167 — PL_OC (port layer overall control) state machine 346
Figure 168 — PL_PM (port layer phy manager) state machine (part 1) 355
Figure 169 — PL_PM (port layer phy manager) state machine (part 2) 356
Figure 170 — Task management function sequence of SSP frames 372
Figure 171 — Non-data command sequence of SSP frames 373
Figure 172 — Write command sequence of SSP frames 373
Figure 173 — Read command sequence of SSP frames 374
Figure 174 — Bidirectional command sequence of SSP frames 374
Figure 175 — ST_I (transport layer for SSP initiator ports) state machines 382
Figure 176 — ST_T (transport layer for SSP target ports) state machines 396
Figure 177 — Sequence of SMP frames 413
Figure 178 — MT_IP (transport layer for SMP initiator ports) state machine 414

This is a preview - click here to buy the full publication

Figure 179 — MT_TP (transport layer for SMP target ports) state machine 416
Figure 180 — SA_PC (SCSI application layer power condition) state machine for SAS 444
Figure B.1 — A simple physical link 489
Figure B.2 — Transmitter device details 490
Figure B.3 — Receiver device details 491
Figure B.4 — De-embedding of connectors in test fixtures 493
Figure B.5 — Measurement conditions for signal output at the transmitter device 494
Figure B.6 — Transmitter device signal output measurement test fixture details 494
Figure B.7 — Measurement conditions for signal tolerance at the transmitter device 495
Figure B.8 — Calibration of test fixture for signal tolerance at the transmitter device 495
Figure B.9 — Measurement conditions for signal output at the receiver device 495
Figure B.10 — Measurement conditions for signal tolerance at the receiver device 496
Figure B.11 — Calibration of test fixture for signal tolerance at the receiver device 496
Figure B.12 — S-parameter port naming conventions 497
Figure B.13 — Four single-ended port or two differential port element 498
Figure B.14 — S-parameters for single-ended and differential systems 498
Figure B.15 — Measurement conditions for upstream return loss at the transmitter device connector 499
Figure B.16 — Measurement conditions for downstream return loss at the receiver device connector 500
Figure B.17 — Measurement conditions for downstream return loss at IT or CT 501
Figure B.18 — Measurement conditions for upstream return loss at IR or CR 502
Figure C.1 — SAS speed negotiation sequence (phy A: G1 only, phy B: G1 only) 503
Figure C.2 — SAS speed negotiation sequence (phy A: G1, G2, phy B: G1, G2) 504
Figure C.3 — SAS speed negotiation sequence (phy A: G1, G2, G3, phy B: G1, G2) 505
Figure C.4 — SAS speed negotiation sequence (phy A: G2, G3, phy B: G1, G2) 506
Figure C.5 — SAS speed negotiation sequence (phy A: G1 only, phy B: G2 only) 507
Figure D.1 — CRC generator example 508
Figure D.2 — CRC checker example 508
Figure E.1 — BCH(69, 39, 9) code generator 513
Figure F.1 — Scrambler 518
Figure I.1 — Example topology 524
Figure I.2 — Connection request - OPEN_ACCEPT 526
Figure I.3 — Connection request - OPEN_REJECT by end device 527
Figure I.4 — Connection request - OPEN_REJECT by expander device 528
Figure I.5 — Connection request - arbitration lost 529
Figure I.6 — Connection request - backoff and retry 530
Figure I.7 — Connection request - backoff and reverse path 531
Figure I.8 — Connection close - single step 532
Figure I.9 — Connection close - simultaneous 533
Figure I.10 — BREAK handling during path arbitration 534
Figure I.11 — BREAK handling during a connection 535
Figure I.12 — STP connection - originated by STP initiator port 536
Figure I.13 — STP connection - originated by STP target port in an STP/SATA bridge 537
Figure I.14 — STP connection close - originated by STP initiator port 538
Figure I.15 — STP connection close - originated by STP target port in an STP/SATA bridge 539
Figure I.16 — XL1:Request_Path to XL5:Forward_Open transition 540
Figure I.17 — Partial pathway recovery 541
Figure M.1 — SAS icon 588

This is a preview - click here to buy the full publication

INFORMATION TECHNOLOGY – SMALL COMPUTER SYSTEM INTERFACE (SCSI) –

Part 151: Serial attached SCSI-1.1 (SAS-1.1)

Foreword

1) ISO (International Organization for Standardization) and IEC (International Electrotechnical Commission) form the specialized system for worldwide standardization. National bodies that are members of ISO or IEC participate in the development of International Standards. Their preparation is entrusted to technical committees; any ISO and IEC member body interested in the subject dealt with may participate in this preparatory work. International governmental and non-governmental organizations liaising with ISO and IEC also participate in this preparation.

2) In the field of information technology, ISO and IEC have established a joint technical committee, ISO/IEC JTC 1. Draft International Standards adopted by the joint technical committee are circulated to national bodies for voting. Publication as an International Standard requires approval by at least 75 % of the national bodies casting a vote.

3) The formal decisions or agreements of IEC and ISO on technical matters express, as nearly as possible, an international consensus of opinion on the relevant subjects since each technical committee has representation from all interested IEC and ISO member bodies.

4) IEC, ISO and ISO/IEC publications have the form of recommendations for international use and are accepted by IEC and ISO member bodies in that sense. While all reasonable efforts are made to ensure that the technical content of IEC, ISO and ISO/IEC publications is accurate, IEC or ISO cannot be held responsible for the way in which they are used or for any misinterpretation by any end user.

5) In order to promote international uniformity, IEC and ISO member bodies undertake to apply IEC, ISO and ISO/IEC publications transparently to the maximum extent possible in their national and regional publications. Any divergence between any ISO/IECpublication and the corresponding national or regional publication should be clearly indicated in the latter.

6) ISO and IEC provide no marking procedure to indicate their approval and cannot be rendered responsible for any equipment declared to be in conformity with an ISO/IEC publication.

7) All users should ensure that they have the latest edition of this publication.

8) No liability shall attach to IEC or ISO or its directors, employees, servants or agents including individual experts and members of their technical committees and IEC or ISO member bodies for any personal injury, property damage or other damage of any nature whatsoever, whether direct or indirect or for costs (including legal fees) and expenses arising out of the publication of, use of or reliance upon, this ISO/IEC publication or any other IEC, ISO or ISO/IEC publications.

9) Attention is drawn to the normative references cited in this publication. Use of the referenced publications is indispensable for the correct application of this publication.

10) Attention is drawn to the possibility that some of the elements of this International Standard may be the subject of patent rights. ISO and IEC shall not be held responsible for identifying any or all such patent rights.

International Standard ISO/IEC 14776-151 was prepared by subcommittee 25: Interconnection of Information technology equipment, of ISO/IEC joint technical committee 1: Information technology.

The list of all currently available parts of the ISO/IEC 14776 series, under the general title *Information technology – Small computer system interface (SCSI),* can be found on the IEC web site.

This International Standard has been approved by vote of the member bodies and the voting results may be obtained from the address given on the second title page.

This publication has been drafted in accordance with the ISO/IEC Directives, Part 2.

IMPORTANT - the “colour inside” logo on the cover page of this publication indicates that it contains colours which are considered to be useful for the correct understanding of its contents. Users should therefore print this publication using a colour printer

This is a preview - click here to buy the full publication

Introduction

This International Standard defines the Serial Attached SCSI (SAS) interconnect and three transport protocols that use the SAS interconnect.

a) Serial SCSI Protocol (SSP): a mapping of SCSI supporting multiple initiators and targets.
b) Serial ATA Tunneled Protocol (STP): a mapping of Serial ATA expanded to support multiple initiators and targets.
c) Serial Management Protocol (SMP): a management protocol.

The standard is organized as follows:

Clause 1 (Scope) describes the relationship of this standard to the SCSI and ATA families of standards.
Clause 2 (Normative references) provides references to other standards and documents.
Clause 3 (Terms, definitions, symbols, abbreviations, keywords and conventions) defines terms and conventions used throughout this standard.
Clause 4 (General) describes architecture, names and identifiers, state machines, resets, I_T nexus loss and provides an expander device model.
Clause 5 (Physical layer) describes the physical layer. It describes passive interconnect components (connectors, cables and backplanes) and defines the transmitter and receiver electrical characteristics.
Clause 6 (Phy layer) describes the phy layer. It describes 8b10b encoding, bit order, out of band (OOB) signals, phy reset sequences, phy layer state machines, and spin-up.
Clause 7 (Link layer) describes the link layer. It describes primitives, clock skew management, idle physical links, CRC, scrambling, address frames, the identification sequence and its state machine, power management, SAS domain changes, connections, rate matching and SSP, STP and SMP connection rules and link layer state machines.
Clause 8 (Port layer) describes the port layer, which sits between one or more link layers and one or more transport layers. It includes port layer state machines.
Clause 9 (Transport layer) describes the transport layer. It includes SSP, STP and SMP frame definitions and transport layer state machines.
Clause 10 (Application layer) describes the application layer. It describes SCSI protocol services, mode parameters, log parameters and power conditions, ATA specifics and SMP functions.

Annex A (normative) (Jitter tolerance patterns) describes the jitter tolerance patterns.
Annex B (normative) (Signal performance measurements) describes signal measurement techniques.
Annex C (informative) (SAS to SAS phy reset sequence examples) provides additional phy reset sequence examples.
Annex D (informative) (CRC) provides information and example implementations of the CRC algorithm.
Annex E (informative) (SAS address hashing) provides information and example implementations of the hashing algorithm.
Annex F (informative) (Scrambling) provides information and example implementations of the scrambling algorithm.
Annex G (informative) (ATA architectural notes) describes ATA architectural differences from Serial ATA and Serial ATA II.
Annex H (informative) (ALIGN and/or NOTIFY insertion rate summary) describes the minimum ALIGN and/or NOTIFY insertion rates for clock skew management, rate matching and STP initiator phy throttling.
Annex I (informative) (Expander device handling of connections) describes expander device behavior in a variety of connection examples.
Annex J (informative) (Primitive encoding) lists the primitive encodings available for future versions of this standard.
Annex K (informative) (Messages between state machines) contains a list of messages between state machines.
Annex L (informative) (Discover process example implementation) provides an example implementation of the discover process.
Annex M (informative) (SAS icon) defines the general SAS icon.
Bibliography

This is a preview - click here to buy the full publication

The following figure shows the organization of the layers of this standard.

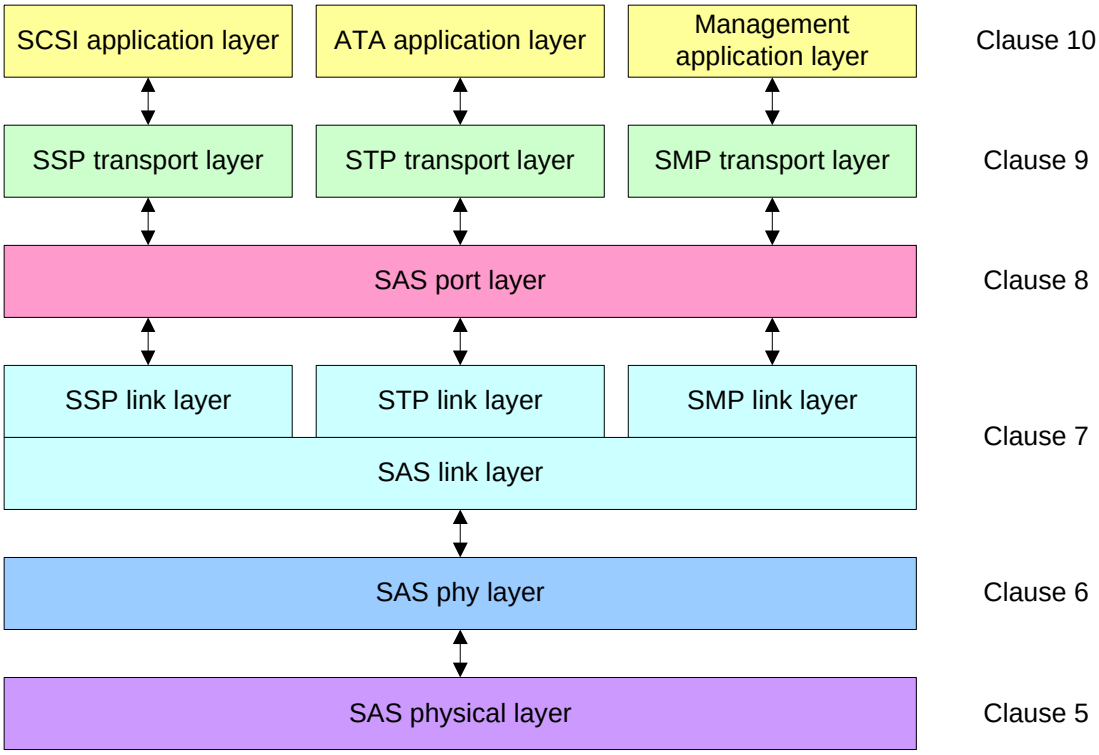

Figure 0 - Organization of this standard

This is a preview - click here to buy the full publication

INFORMATION TECHNOLOGY – SMALL COMPUTER SYSTEM INTERFACE (SCSI) –

Part 151: Serial attached SCSI-1.1 (SAS-1.1)

1 Scope

The SCSI family of standards provides for many different transport protocols that define the rules for exchanging information between different SCSI devices. This part of ISO/IEC 14776 defines the rules for exchanging information between SCSI devices using a serial interconnect. Other SCSI transport protocol standards define the rules for exchanging information between SCSI devices using other interconnects.

Figure 1 shows the relationship of this International Standard to the other standards and related projects in the SCSI family of standards.

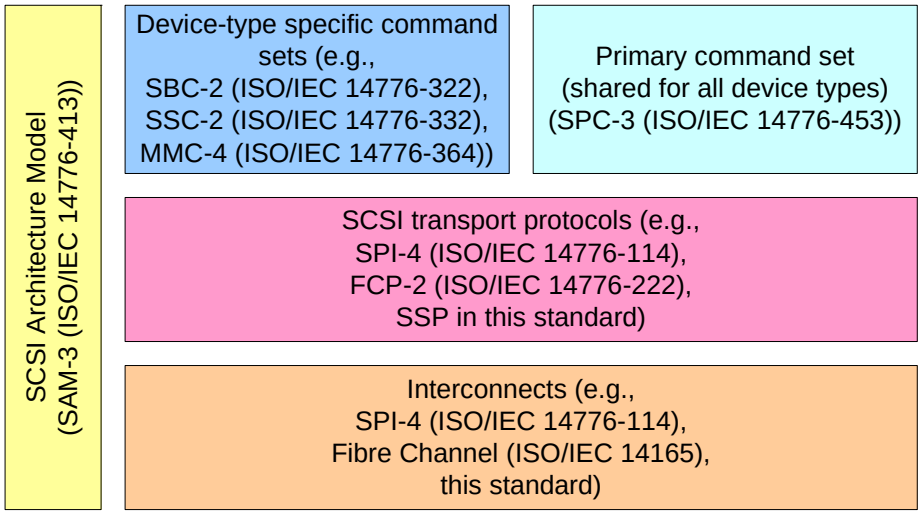

Figure 1 — SCSI document relationships

This standard also defines the rules for exchanging information between ATA hosts and ATA devices using the same serial interconnect. Other ATA transport protocol standards define the rules for exchanging information between ATA hosts and ATA devices using other interconnects.

This is a preview - click here to buy the full publication

Figure 2 shows the relationship of this standard to other standards and related projects in the ATA family of standards.

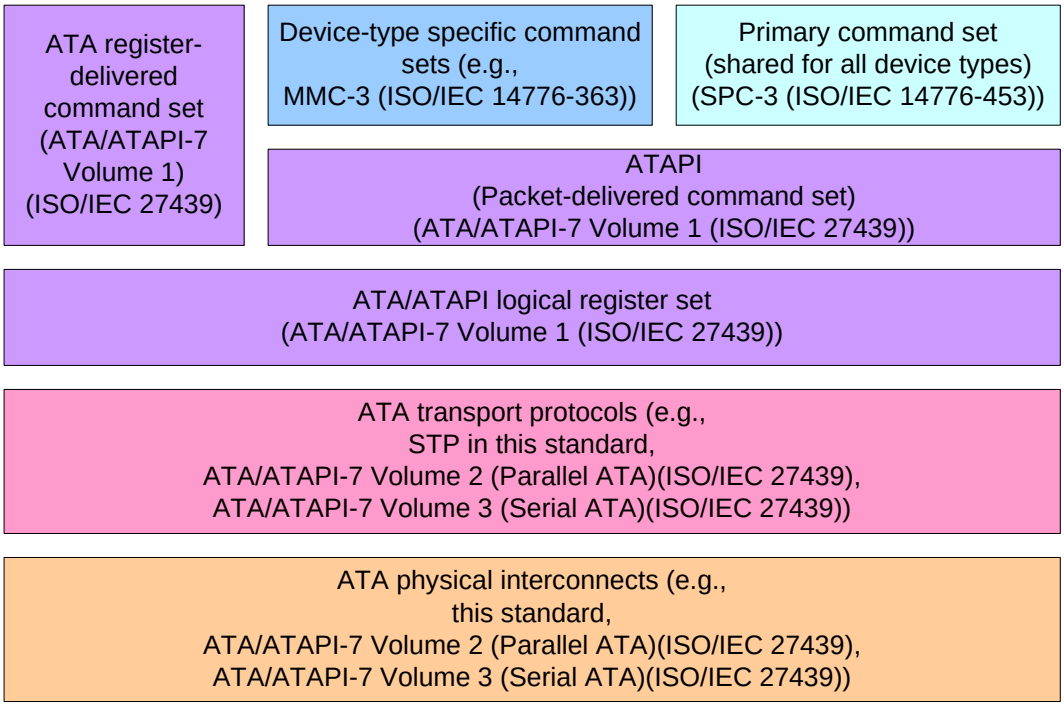

Figure 2 — ATA document relationships

Figure 1 and figure 2 show the general relationship of the documents to one another and they do not imply a relationship such as a hierarchy, protocol stack or system architecture.

These standards specify the interfaces, functions and operations necessary to ensure interoperability between conforming implementations. This standard is a functional description. Conforming implementations may employ any design technique that does not violate interoperability.

 This is a preview - click here to buy the full publication

2 Normative references

The following referenced documents are indispensable for the application of this document. For dated references, only the edition cited applies. For undated references, the latest edition of the referenced document, including any amendments, applies.

The provisions of the referenced specifications other than ISO/IEC, IEC, ISO and ITU documents, as identified in this clause, are valid within the context of this International Standard. The reference to such a specification within this International Standard does not give it any further status within ISO/IEC. In particular, it does not give the referenced specification the status of an International Standard.

ISO/IEC TR 14165-117, *Information technology – Fibre channel – Part 117: Methodologies for jitter and signal quality (MJSQ)* [ANSI INCITS TR-35-2004]

NOTE 1 - When MJSQ is referenced from this standard, the FC Port terminology used within MJSQ should be substituted with SAS phy terminology.

ISO/IEC 14776-413, *Information technology – Small computer system interface (SCSI) – Part 413: Architecture model-3 (SAM-3)* [ANSI INCITS 402-2005]

ISO/IEC 14776-322, *Information technology – Small computer system interface (SCSI) – Part 322: Block commands-2 (SBC-2)* [ANSI INCITS 405-2005]

ISO/IEC 14776-372, *Information technology – Small computer system interface (SCSI) – Part 372: Enclosure services-2 (SES-2)* (under consideration) [ANSI INCITS 448-2008]

ISO/IEC 14776-453, *Information technology – Small computer system interface (SCSI) – Part 453: Primary commands-3 (SPC-3)* [ANSI INCITS 408-2005]

ISO/IEC 24739-1, *Information technology – AT Attachment with Packet Interface – Part 1: Register delivered command set, logical register set (ATA/ATAPI-7 V1)* [ANSI INCITS 397-2005]

ISO/IEC 24739-3, *Information technology – AT Attachment with Packet Interface-7 – Part 3: Serial Transport Protocols and Physical Interconnect (ATA/ATAPI-7 V3)* (under consideration) [ANSI INCITS 397-2005]

AT Attachment with Packet Interface-7 Amendment 1 [ANSI INCITS 397-2005/AMD1]

ISO/IEC 19501, *Information technology -- Open Distributed Processing -- Unified Modeling Language (UML) Version 1.4.2*

SFF-8086, *Compact Multilane Series: Common Elements*

SFF-8087, *Compact Multilane Series: Unshielded*

SFF-8088, *Compact Multilane Series: Shielded*

SFF-8223, *2.5" Drive Form Factor with Serial Connector*

SFF-8323, *3.5" Drive Form Factor with Serial Connector*

SFF-8523, *5.25" Drive Form Factor with Serial Connector*

SFF-8416, *Measurement and Performance Requirements for HPEI Bulk Cable*

SFF-8460, *HSS Backplane Design Guidelines*

SFF-8470, *Shielded High Speed Multilane Copper Connector*

SFF-8482, *Unshielded Dual Port Serial Attachment Connector*

SFF-8484, *Multi-Lane Unshielded Serial Attachment Connectors*

SFF-8485, *Serial GPIO (SGPIO) Bus*

NOTE 2 - For more information on the current status of SFF document, contact the SFF Committee at 408-867-6630 (phone) or 408-867-2115 (fax). To obtain copies of these documents, contact the SFF Committee at 14426 Black Walnut Court, Saratoga, CA 95070 at 408-867-6630 (phone) or 408-741-1600 (fax) or see http://www.sffcommittee.org.