ISO/IEC 14776-153

Edition 1.0 2015-02

INTERNATIONAL STANDARD

colour inside

Information technology – Small computer system interface (SCSI) – Part 153: Serial attached SCSI - 2.1 (SAS-2.1)

INTERNATIONAL
ELECTROTECHNICAL
COMMISSION

ICS 35.200

ISBN 978-2-8322-2204-1

CONTENTS

INFORMATION TECHNOLOGY –
SMALL COMPUTER SYSTEM INTERFACE (SCSI) –

Part 153: SERIAL ATTACHED SCSI - 2.1 (SAS-2.1)

FOREWORD

1) ISO (the International Organization for Standardization) and IEC (the International Electrotechnical Commission) form the specialized system for worldwide standardization. National bodies that are members of ISO or IEC participate in the development of International Standards through technical committees established by the respective organization to deal with particular fields of technical activity. ISO and IEC technical committees collaborate in fields of mutual interest. Other international organizations, governmental and non-governmental, in liaison with ISO and IEC, also take part in the work. In the field of information technology, ISO and IEC have established a joint technical committee, ISO/IEC JTC 1.

2) The formal decisions or agreements of IEC and ISO on technical matters express, as nearly as possible, an international consensus of opinion on the relevant subjects since each technical committee has representation from all interested IEC National Committees and ISO member bodies.

3) IEC, ISO and ISO/IEC publications have the form of recommendations for international use and are accepted by IEC National Committees and ISO member bodies in that sense. While all reasonable efforts are made to ensure that the technical content of IEC, ISO and ISO/IEC publications is accurate, IEC or ISO cannot be held responsible for the way in which they are used or for any misinterpretation by any end user.

4) In order to promote international uniformity, IEC National Committees and ISO member bodies undertake to apply IEC, ISO and ISO/IEC publications transparently to the maximum extent possible in their national and regional publications. Any divergence between any ISO, IEC or ISO/IEC publication and the corresponding national or regional publication should be clearly indicated in the latter.

5) ISO and IEC do not provide any attestation of conformity. Independent certification bodies provide conformity assessment services and, in some areas, access to IEC marks of conformity. ISO or IEC are not responsible for any services carried out by independent certification bodies.

6) All users should ensure that they have the latest edition of this publication.

7) No liability shall attach to IEC or ISO or its directors, employees, servants or agents including individual experts and members of their technical committees and IEC National Committees or ISO member bodies for any personal injury, property damage or other damage of any nature whatsoever, whether direct or indirect, or for costs (including legal fees) and expenses arising out of the publication of, use of, or reliance upon, this ISO/IEC publication or any other IEC, ISO or ISO/IEC publications.

8) Attention is drawn to the normative references cited in this publication. Use of the referenced publications is indispensable for the correct application of this publication.

9) Attention is drawn to the possibility that some of the elements of this ISO/IEC publication may be the subject of patent rights. ISO and IEC shall not be held responsible for identifying any or all such patent rights.

International Standard ISO/IEC 14776-153 was prepared by subcommittee 25: Interconnection of information technology equipment, of ISO/IEC joint technical committee 1: Information technology.

The list of all currently available parts of the ISO/IEC 14776 series, under the general title *Information technology – Small computer system interface (SCSI)*, can be found on the IEC web site.

This International Standard has been approved by vote of the member bodies and the voting results may be obtained from the address given on the second title page.

This publication has been drafted in accordance with the ISO/IEC Directives, Part 2, as far as is practicable.

IMPORTANT – The 'colour inside' logo on the cover page of this publication indicates that it contains colours which are considered to be useful for the correct understanding of its contents. Users should therefore print this document using a colour printer.

INTRODUCTION

General

The SCSI family of standards provides for many different transport protocols that define the rules for exchanging information between different SCSI devices. This standard specifies the functional requirements for the Serial Attached SCSI (SAS) physical interconnect, which is compatible with the Serial ATA physical interconnect. The SAS Protocol Layer (SPL) standard documents the SAS protocol layer corresponding to the Serial Attached SCSI - 2.1 (SAS-2.1) and beyond, defining the rules for exchanging information between SCSI devices using a serial interconnect. Other SCSI transport protocol standards define the rules for exchanging information between SCSI devices using other interconnects.

SCSI standards family

Figure 1 shows the relationship of this standard to the other standards and related projects in the SCSI family of standards.

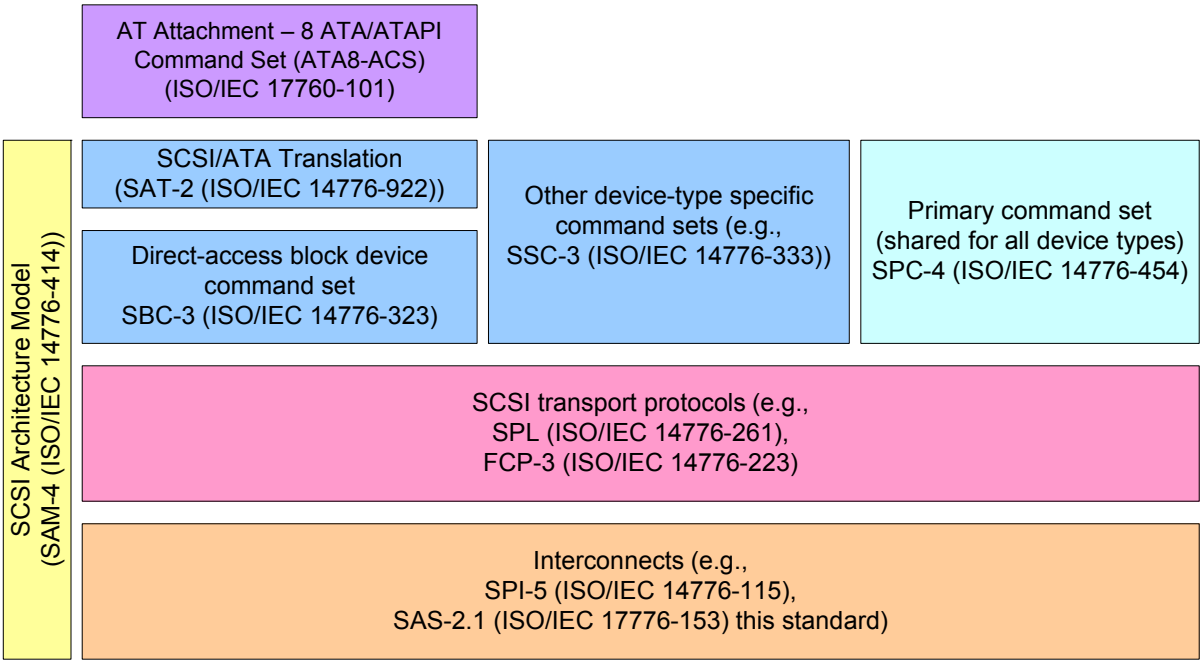

Figure 1 — SCSI document relationships

Figure 2 shows the relationship of this standard to other standards and related projects in the ATA family of standards.

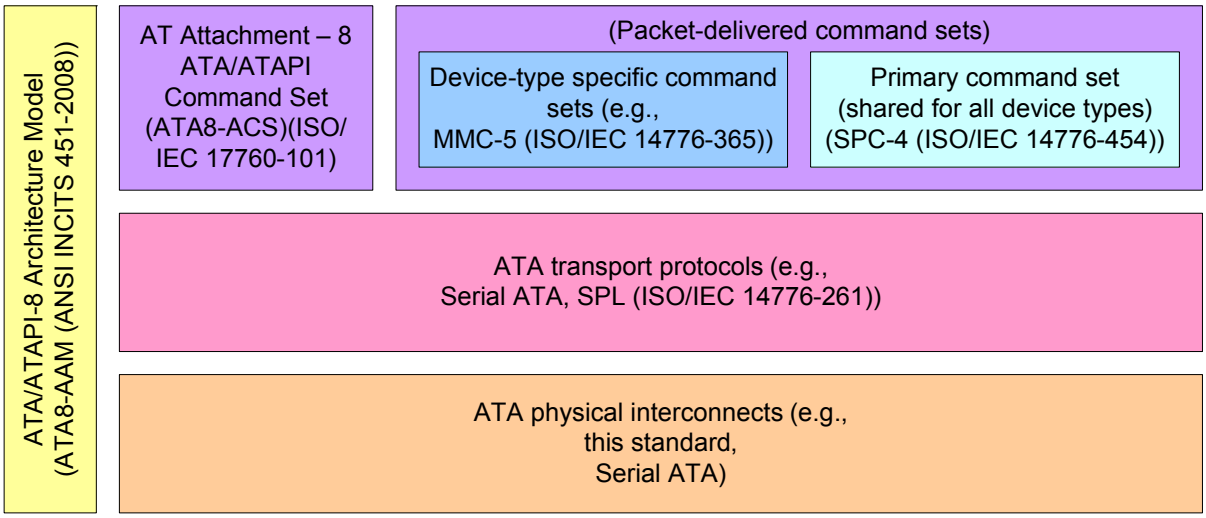

Figure 2 — ATA document relationships

Figure 1 and figure 2 show the general relationship of the documents to one another, and do not imply a relationship such as a hierarchy, protocol stack or system architecture.

These standards specify the interfaces, functions and operations necessary to ensure interoperability between conforming implementations. This standard is a functional description. Conforming implementations may employ any design technique that does not violate interoperability.

INFORMATION TECHNOLOGY –
SMALL COMPUTER SYSTEM INTERFACE (SCSI) –

Part 153: SERIAL ATTACHED SCSI - 2.1 (SAS-2.1)

1 Scope

This part of ISO/IEC 14776 defines the physical layer of the Serial Attached SCSI (SAS) interconnect.

2 Normative references

The following documents, in whole or in part, are normatively referenced in this document and are indispensable for its application. For dated references, only the edition cited applies. For undated references, the latest edition of the referenced document (including any amendments) applies.

ISO/IEC 14165-117, *Information technology – Fibre channel – Part 117: Methodologies for jitter and signal quality (MJSQ)*[1] [2]

ISO/IEC 14776-261, *Information technology – Small Computer System Interface (SCSI) – Part 261: SAS Protocol Layer (SPL)*[3]

ISO/IEC 14776-414, *Information technology – Small Computer System Interface (SCSI) – Part 414: SCSI Architecture Model - 4 (SAM-4)*

ANSI INCITS 451-2008, *Information technology – AT Attachment-8 ATA/ATAPI Architecture Model (ATA8-AAM)*

For information on the current status of the listed documents, or regarding availability, contact the indicated organization.

Serial ATA Revision 3.0 (SATA). 2 June 2009

NOTE 1 For more information on Serial ATA international Organization, see www.sata-io.org.

SFF-8086, *Compact Multilane Series: Common Elements*

SFF-8087, *Compact Multilane Series: Unshielded*

SFF-8088, *Compact Multilane Series: Shielded*

SFF-8147, *54mm x 71mm Form Factor w/micro SAS Connector*

SFF-8223, *2.5" Drive Form Factor with Serial Connector*

SFF-8323, *3.5" Drive Form Factor with Serial Connector*

SFF-8410, *HSS Copper Testing and Performance Requirements*

SFF-8416, *Measurement and Performance Requirements for HPEI Bulk Cable*

SFF-8436, *QSFP+ Copper and Optical Modules*

SFF-8449, *Mini Multilane Series Management Interface*

SFF-8460, *HSS Backplane Design Guidelines*

SFF-8482, *Unshielded Dual Port Serial Attachment Connector*

1.ANSI INCITS TR-35-2004
2.When MJSQ is referenced from this standard, the FC Port terminology used within MJSQ should be substituted with SAS phy terminology.
3.T10/2124-D

SFF-8484, *Multi-Lane Unshielded Serial Attachment Connectors*

SFF-8485, *Serial GPIO (SGPIO) Bus*

SFF-8486, *Serial Attachment Micro Connector*

SFF-8523, *5.25" Drive Form Factor with Serial Connector*

SFF-8643, *Mini Multilane Series: Unshielded HD Integrated Connector*

SFF-8644, *Mini Multilane Series: Shielded HD Integrated Connector*

NOTE 2 For more information on the current status of SFF documents, contact the SFF Committee at 408-867-6630 (phone), or 408-867-2115 (fax). To obtain copies of these documents, contact the SFF Committee at 14426 Black Walnut Court, Saratoga, CA 95070 at 408-867-6630 (phone) or 408-741-1600 (fax) or see http://www.sffcommittee.org.

ASTM Standard B 258-02, 2002, *Standard specification for standard nominal diameters and cross-sectional areas of AWG sizes of solid round wires used as electrical conductors*, ASTM International, West Conshohocken, PA, USA.

NOTE 3 For more information on ASTM International standards, see www.astm.org.

PANTONE® Color Formula Guide

NOTE 4 Pantone® and PANTONE MATCHING SYSTEM® are registered trademarks of Pantone, Inc. For more information on Pantone colors, contact Pantone, Inc. (see http://www.pantone.com). This information is given for the convenience of users of this standard and does not constitute an endorsement by [ISO or IEC] of the product named. Equivalent products may be used if they can be shown to lead to the same results.

Touchstone® File Format Specification. Revision 1.1. IBIS Open Forum.

NOTE 5 Touchstone® is a registered trademark of Agilent Corporation. For more information on the Touchstone specification, contact the IBIS Open Forum (see http://www.eigroup.org). This information is given for the convenience of users of this standard and does not constitute an endorsement by [ISO or IEC] of the product named. Equivalent products may be used if they can be shown to lead to the same results.

MATLAB® 7 Programming Fundamentals. Release 2008b.

NOTE 6 MATLAB® is a registered trademark of The MathWorks, Inc. For more information on MATLAB, contact The Mathworks, Inc. (see http://www.mathworks.com). This information is given for the convenience of users of this standard and does not constitute an endorsement by [ISO or IEC] of the product named. Equivalent products may be used if they can be shown to lead to the same results.